SKILLING - HELLE - CHRISTIANSEN - ROBERTSON Structural & Civil Engineers

PROJECT THE WORLD TRADE CENTER | TITLE PLATE GIRDER J4D | DATE 5-1-68

REVISIONS
7-19-68
12-3-68
1-8-69
1-20-69

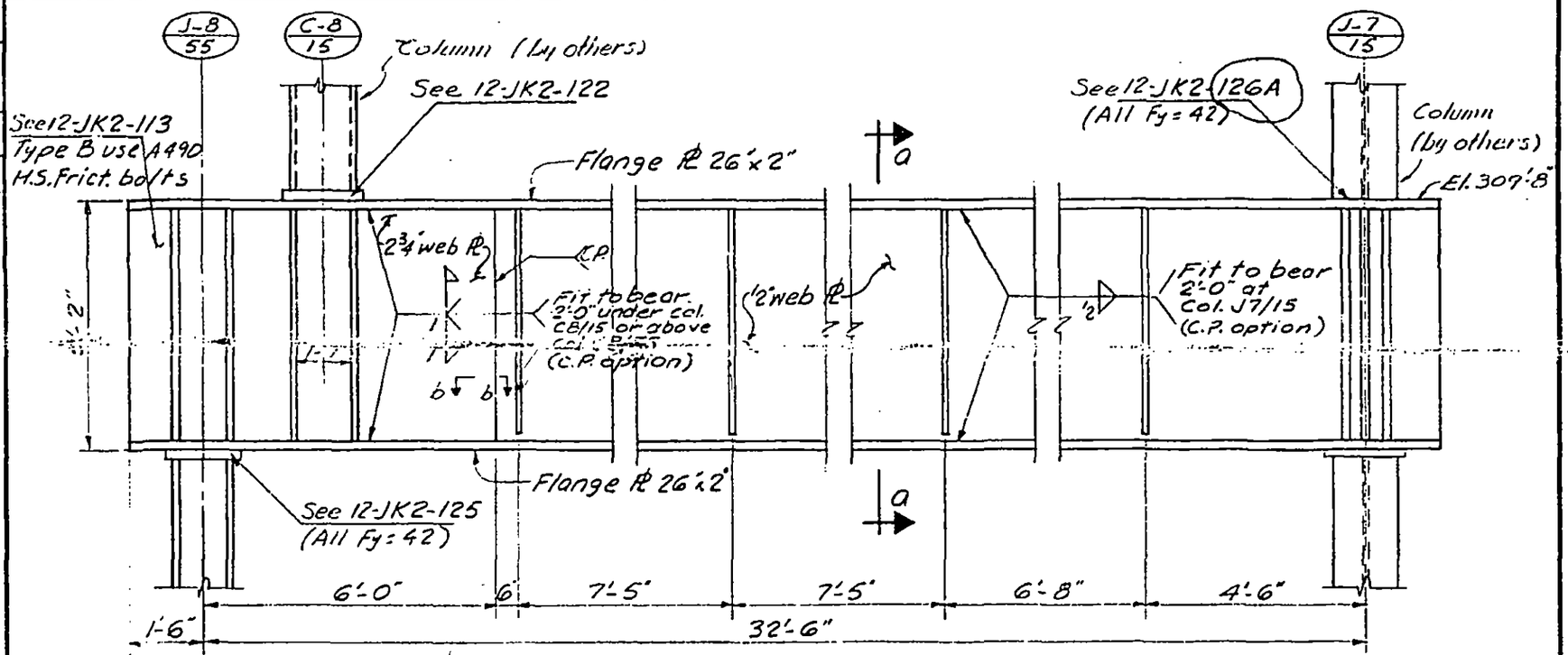

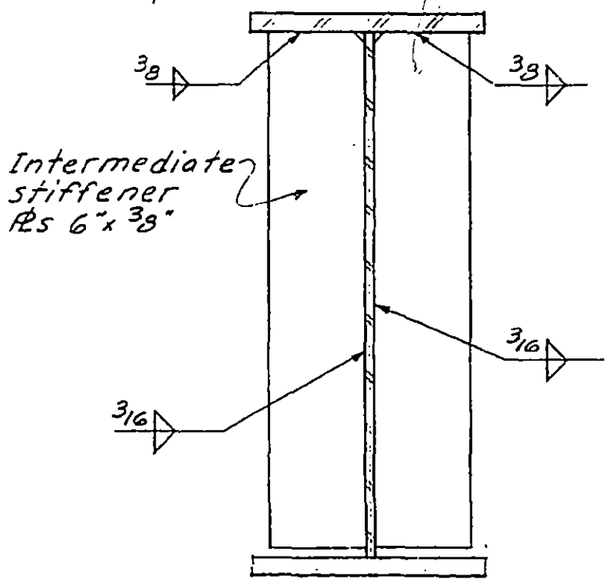

Section a-a

Note:
1. All material with Fy=42 except as noted.

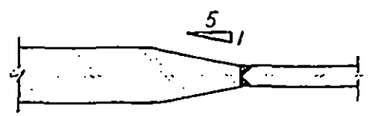

Section b-b

LICENSED PROFESSIONAL ENGINEER LESLIE E. ROBERTSON No. 34360 UNIVERSITY OF THE STATE OF NEW YORK

DRAWN A.F.

REVIEWED E.L.

12-JK2-105

1042-L,3

SKILLING - HELLE - CHRISTIANSEN - ROBERTSON Structural & Civil Enginoors

PROJECT THE WORLD TRADE CENTER | TITLE GIRDER BRACING DETAILS | DATE 5-1-68

REVISIONS

7-19-68

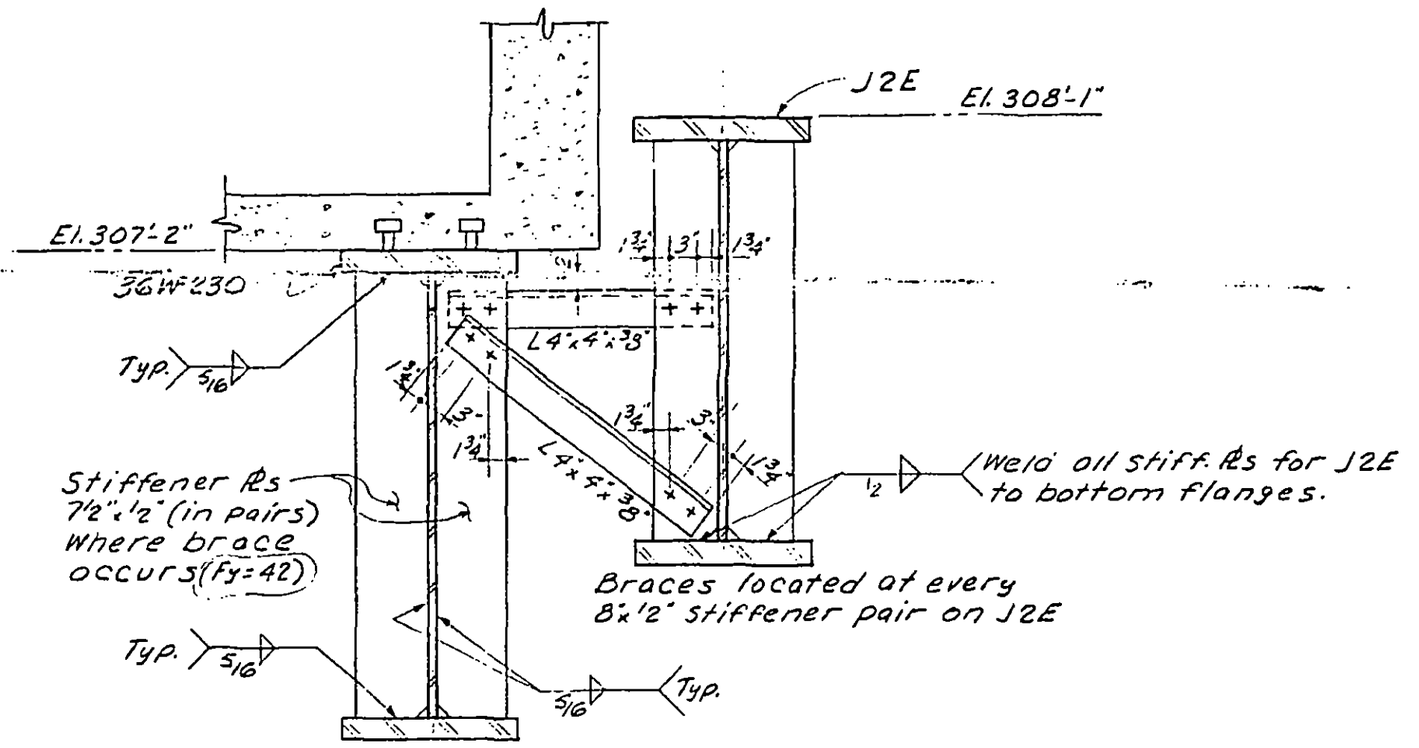

LICENSED PROFESSIONAL ENGINEER
LESLIE E. ROBERTSON
No. 34360
OF THE STATE OF NEW YORK

Note:
1. Bolts are 1"ϕ A325 H.S. friction type connections.

12-JK2-106

SKILLING, HELLE, CHRISTIANSEN, ROBERTSON — Structural & Civil Engineers

PROJECT: THE WORLD TRADE CENTER | TITLE: GIRDER DETAILS | DATE: 4-30-69

REVISIONS

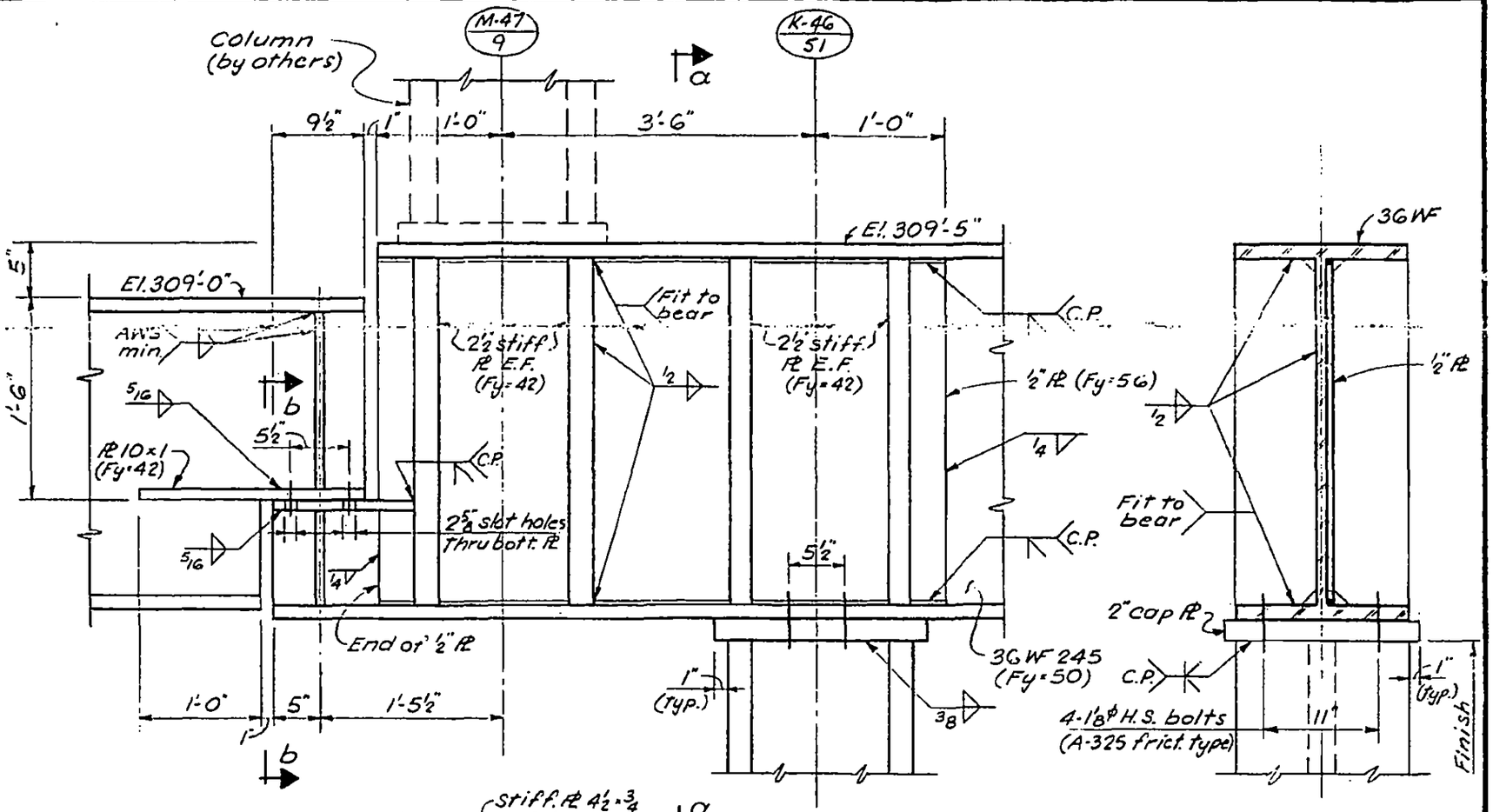

Section a-a

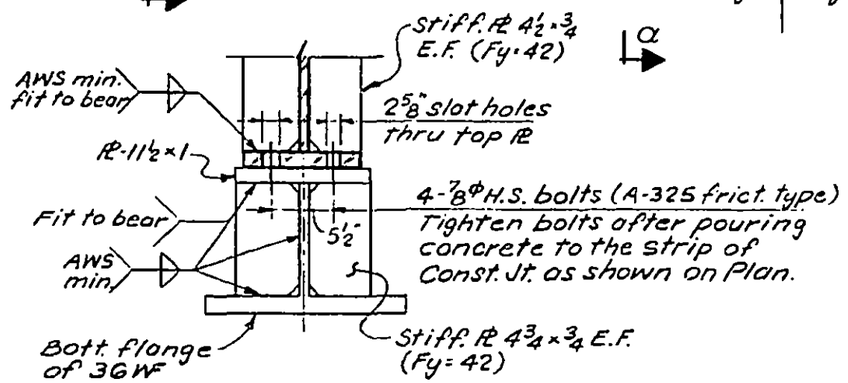

Section b-b

Notes:
1. All welds to be E70xx.
2. Provide washers 2½ × ⅝ (sq. or round) with Fy=50 ksi for all bolts over slot holes.

LICENSED PROFESSIONAL ENGINEER — LESLIE E. ROBERTSON — No. 34360 — UNIVERSITY OF THE STATE OF NEW YORK

DESIGNED

DRAWN: S.C.

REVIEWED: E.L.

12-JK2-107

SKILLING, HELLE, CHRISTIANSEN, ROBERTSON — Structural & Civil Engineers

PROJECT: THE WORLD TRADE CENTER | TITLE: GIRDER DETAILS | DATE: 4-30-69

REVISIONS

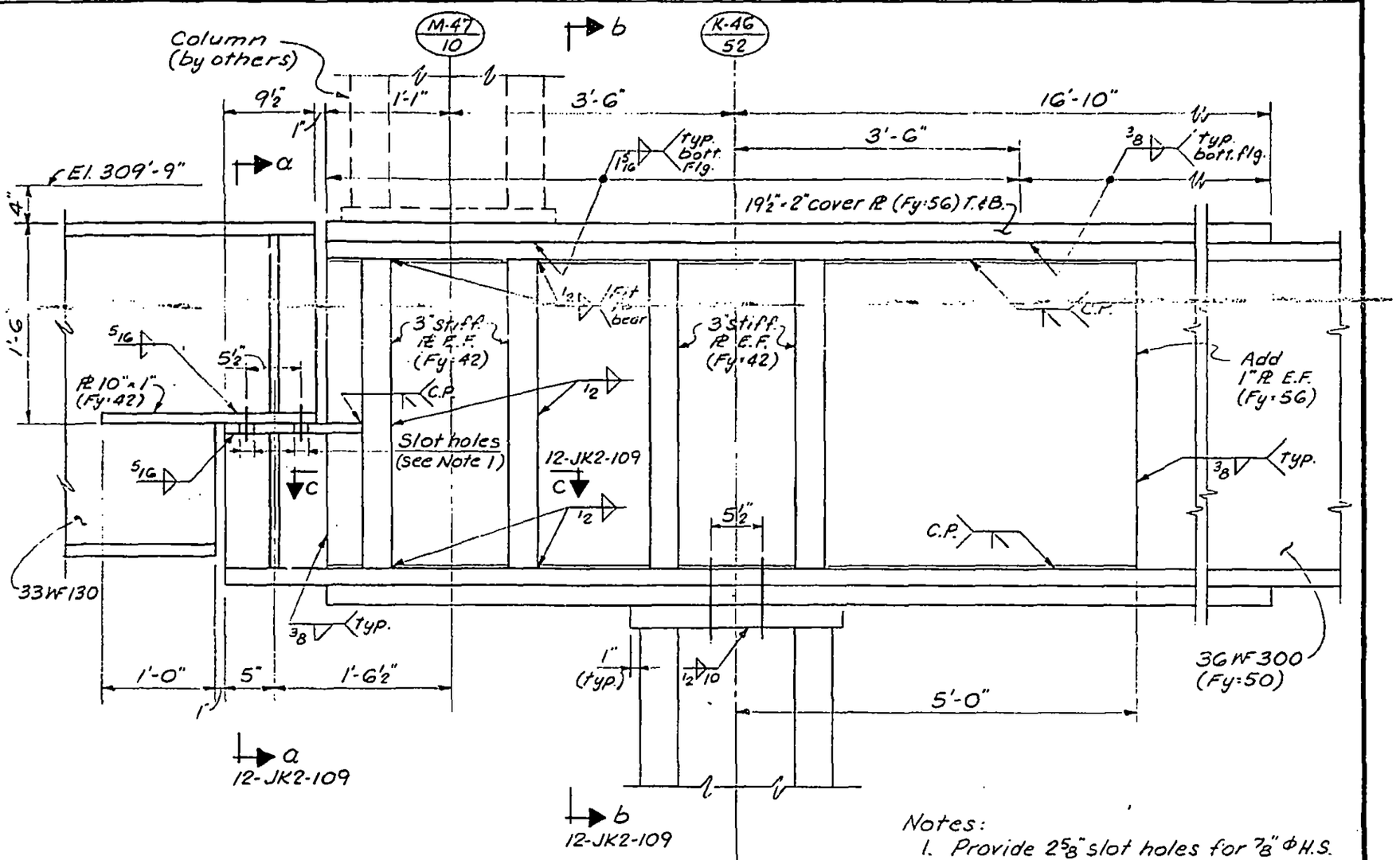

Notes:

1. Provide 2 5/8" slot holes for 7/8" ϕ H.S. bolts (A-325 friction type) as shown. Tighten bolts after pouring concrete to the strip of const jt. as shown on Plan.
2. All welds to be E70xx.
3. Provide washers 2½ x 5/8 (sq. or round) with Fy-50 ksi for all bolts over slot holes.

LICENSED PROFESSIONAL ENGINEER — LESLIE E. ROBERTSON — No. 34360 — UNIVERSITY OF THE STATE OF NEW YORK

DESIGNED

DRAWN S.C.

REVIEWED E.L.

12-JK2-108

SKILLING, HELLE, CHRISTIANSEN, ROBERTSON — Structural & Civil Engineers

PROJECT THE WORLD TRADE CENTER | TITLE GIRDER DETAILS | DATE 4-30-69

REVISIONS

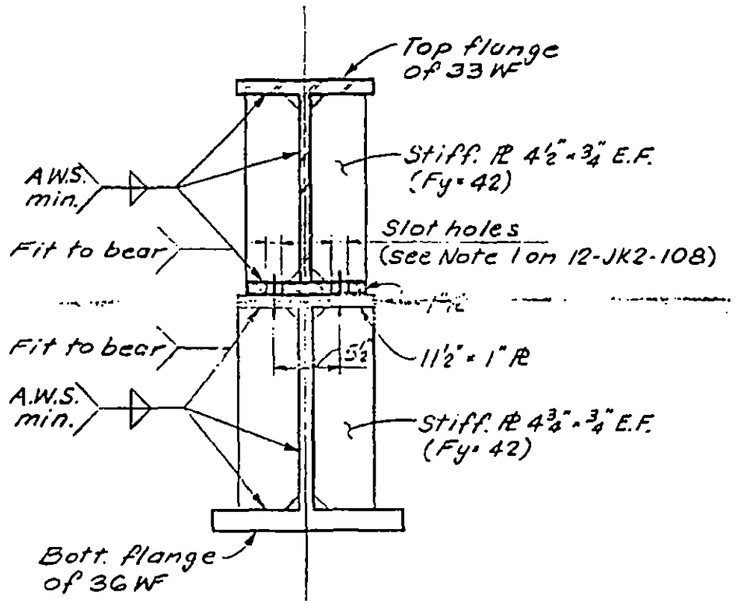

Section a-a

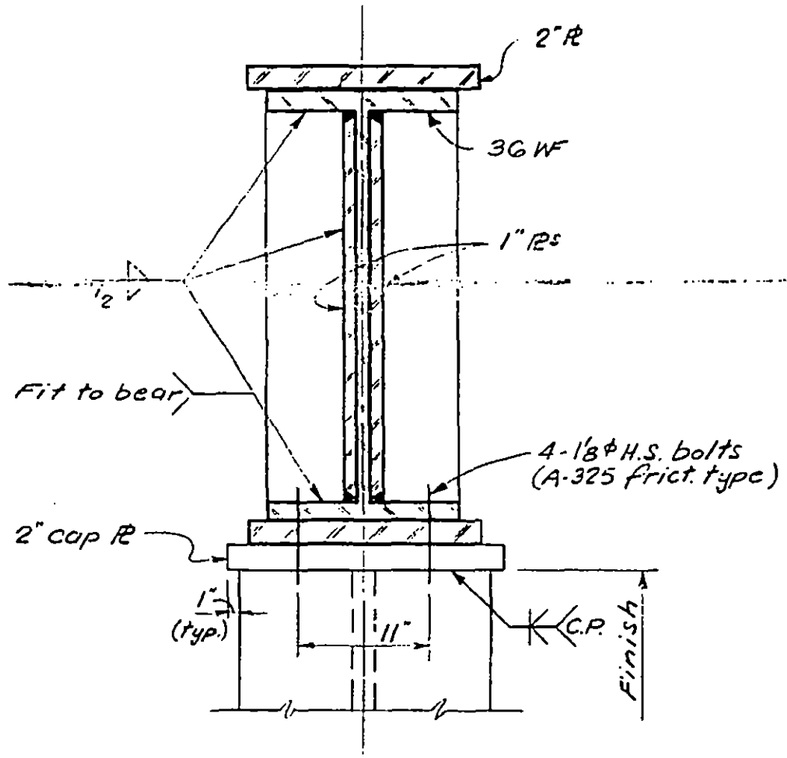

Section b-b

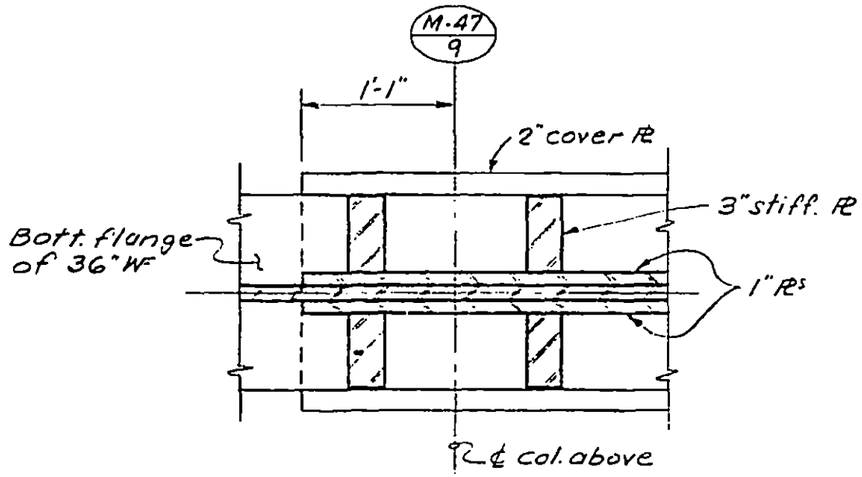

Section c-c

LICENSED PROFESSIONAL ENGINEER — LESLIE E. ROBERTSON — No. 34360 — UNIVERSITY OF THE STATE OF NEW YORK

DESIGNED

DRAWN S.C.

REVIEWED E.L.

12-JK2-109

SKILLING - HELLE - CHRISTIANSEN - ROBERTSON Structural & Civil Enginoors

PROJECT THE WORLD TRADE CENTER | TITLE TYPICAL BEAM TO GIRDER CONNECTION | DATE 5-1-68

REVISIONS

7-19-68

NO STIFFENER AT CONNECTION

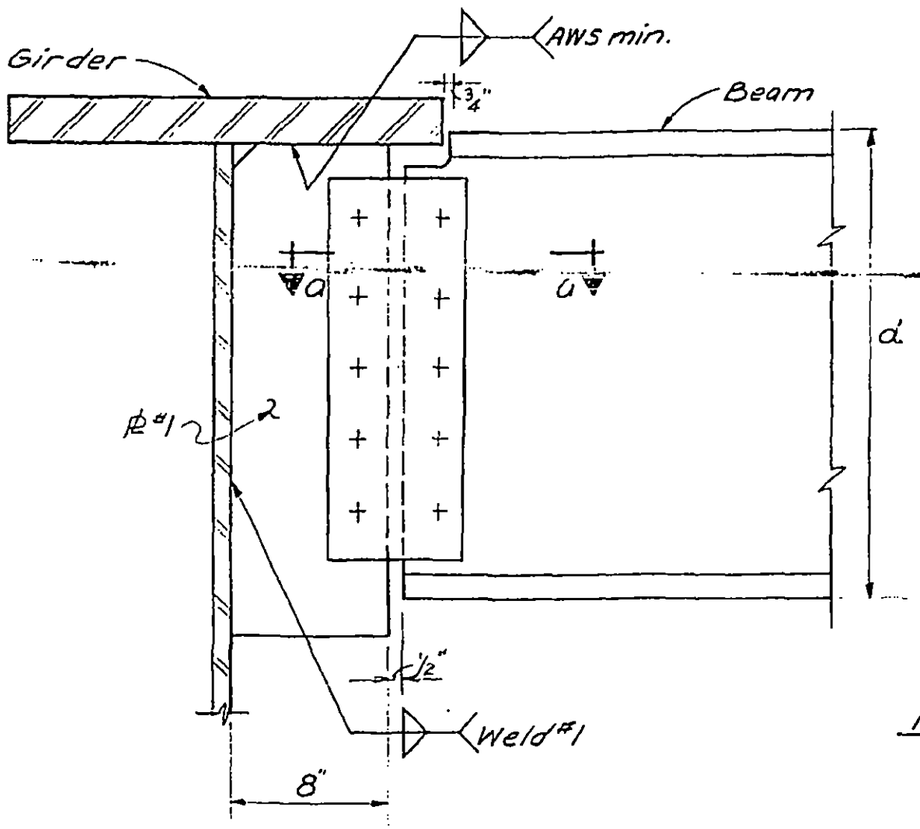

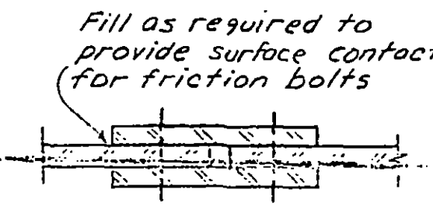

Section a-a

NOTES:

1. Use H.S. friction bolts. A325 (A490 for all connections at El. 310 within Zone J-2 & J-4 areas.)
2. Size and number of bolts, shear plate thickness and Weld #1 to be determined by beam reaction. See plans for beam reaction.
3. Forces at the connection are a vertical reaction from the beam (R), and a horizontal force equal to $\frac{16}{d''}$ (R).

LICENSED PROFESSIONAL ENGINEER LESLIE E. ROBERTSON No. 34360 UNIVERSITY OF THE STATE OF NEW YORK

12-JK2-111

SKILLING - HELLE - CHRISTIANSEN - ROBERTSON Structural & Civil Enginoors

PROJECT THE WORLD TRADE CENTER | TITLE TYPICAL BEAM TO GIRDER CONNECTION | DATE 5-1-68

REVISIONS

7-19-68

CONNECTION AT STIFFENER

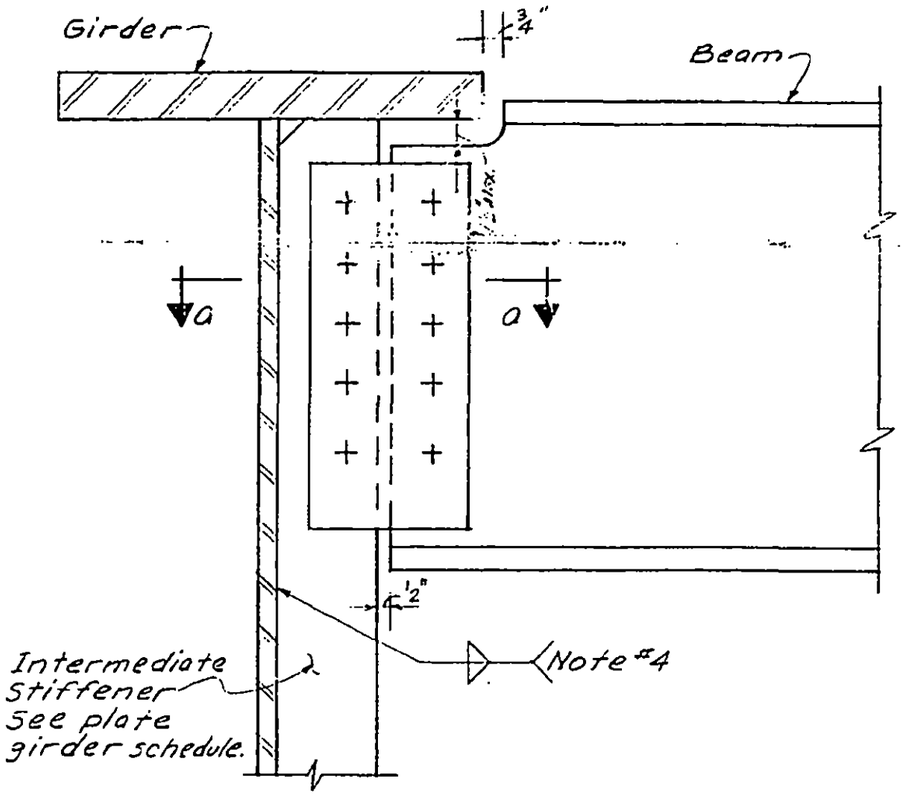

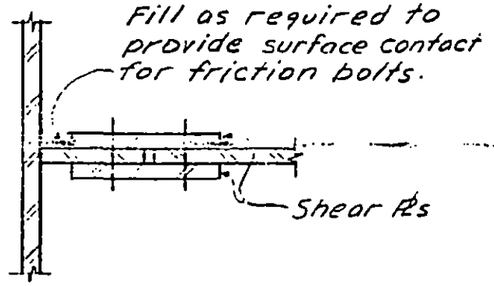

Section a-a

NOTES:

1. Use H.S. friction bolts. A325 (A490 bolts for all connections at El. 310 within Zone J-2 & J-4 areas)
2. Size and number of bolts and shear plate thickness to be determined by beam reaction. See plans for beam reaction.
3. Stiffener width and/or thickness may be increased above that shown in the schedule when necessary to improve beam connection.
4. Increase fillet weld above AWS min. when required by beam reaction.

LICENSED PROFESSIONAL ENGINEER LESLIE E. ROBERTSON No. 34360 UNIVERSITY OF THE STATE OF NEW YORK

12-JK2-112

SKILLING - HELLE - CHRISTIANSEN - ROBERTSON Structural & Civil Engineers

PROJECT THE WORLD TRADE CENTER | TITLE GIRDER CONNECTION DETAIL | DATE 5-1-68

REVISIONS

6-7-68

7-19-68

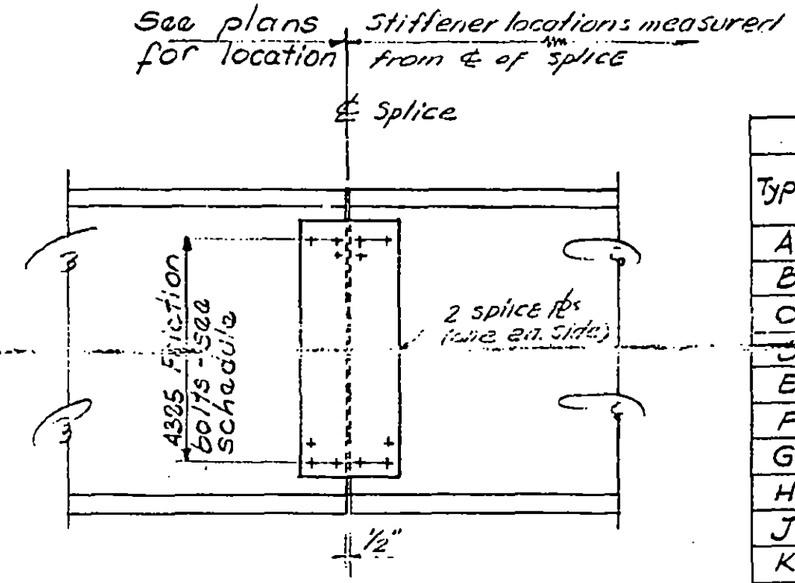

SCHEDULE		
Type	Total No. of Bolts	Splice Plate Thickness
A	24 - 1 1/8" ø	3/8"
B	36 - 1" ø	1/2"
C	72 - 1 1/8" ø	1 3/16"
D	56 - 1" ø	5/8"
E	44 - 1" ø	5/8"
F	48 - 1" ø	5/8"
G	40 - 1" ø	1/2"
H	52 - 1" ø	9/16"
J	72 - 1 1/8" ø	7/8"
K	12 - 3/4" ø	1/4"
L	20 - 1" ø	3/8"
M	48 - 1 1/8" ø	1/2"

Notes:

1. Splice plates are Fy 42.
2. If joining webs are unequal in thickness fill plates are required. Insure surface contact for friction bolts.

LICENSED PROFESSIONAL ENGINEER
LESLIE E. ROBERTSON
No. 34360
UNIVERSITY OF THE STATE OF NEW YORK

12-JK2-113

SKILLING - HELLE - CHRISTIANSEN - ROBERTSON Structural & Civil Engineers

PROJECT THE WORLD TRADE CENTER | TITLE GIRDER CONNECTION DETAIL | DATE 5-1-68

REVISIONS

7-19-68

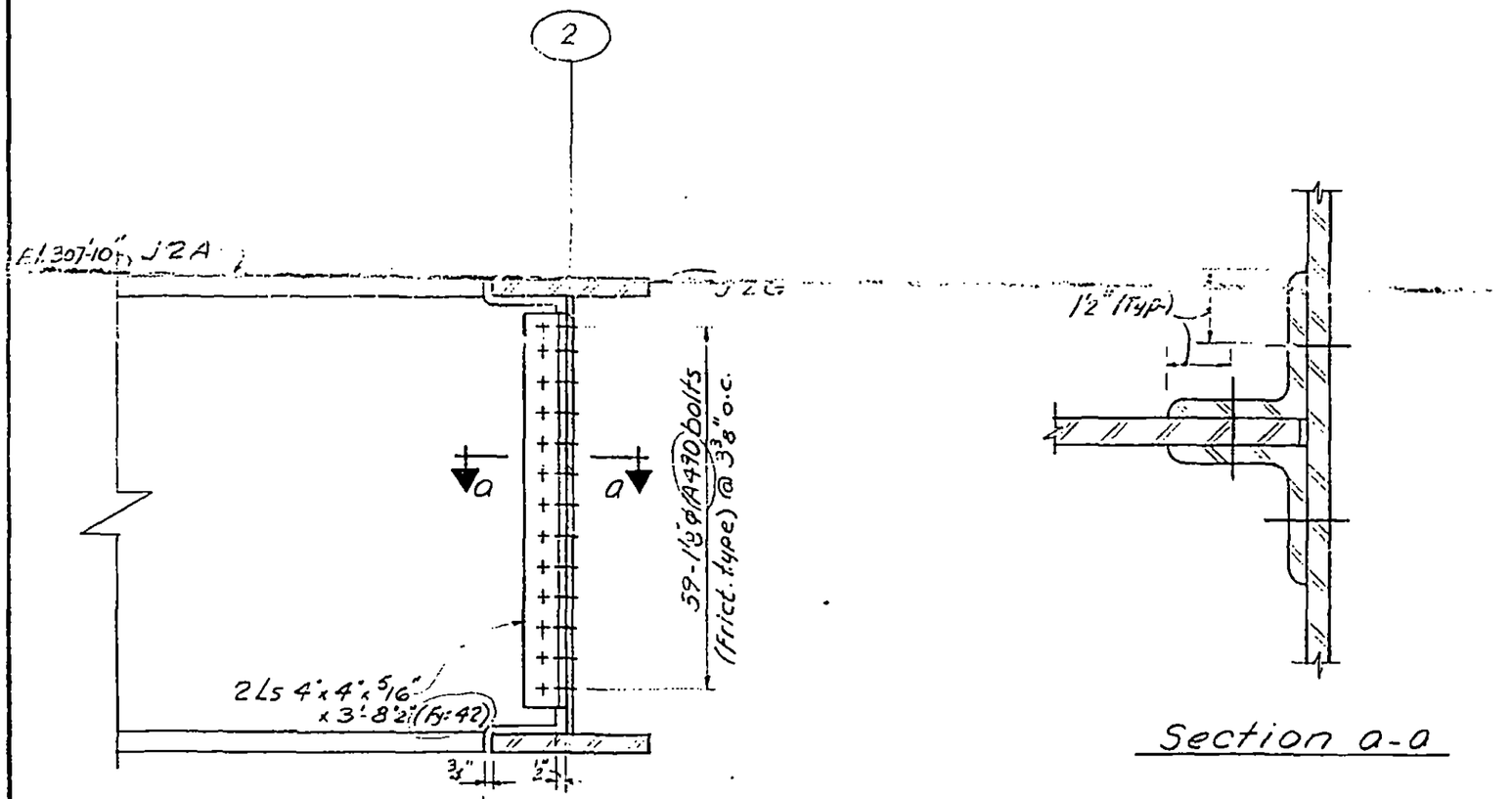

Section a-a

LICENSED PROFESSIONAL ENGINEER
LESLIE E. ROBERTSON
No. 34360
UNIVERSITY OF THE STATE OF NEW YORK

12-JK2-114

SKILLING - HELLE - CHRISTIANSEN - ROBERTSON Structural & Civil Engineers

PROJECT THE WORLD TRADE CENTER | TITLE GIRDER CONNECTION DETAIL | DATE 5-1-68

REVISIONS

7-19-68

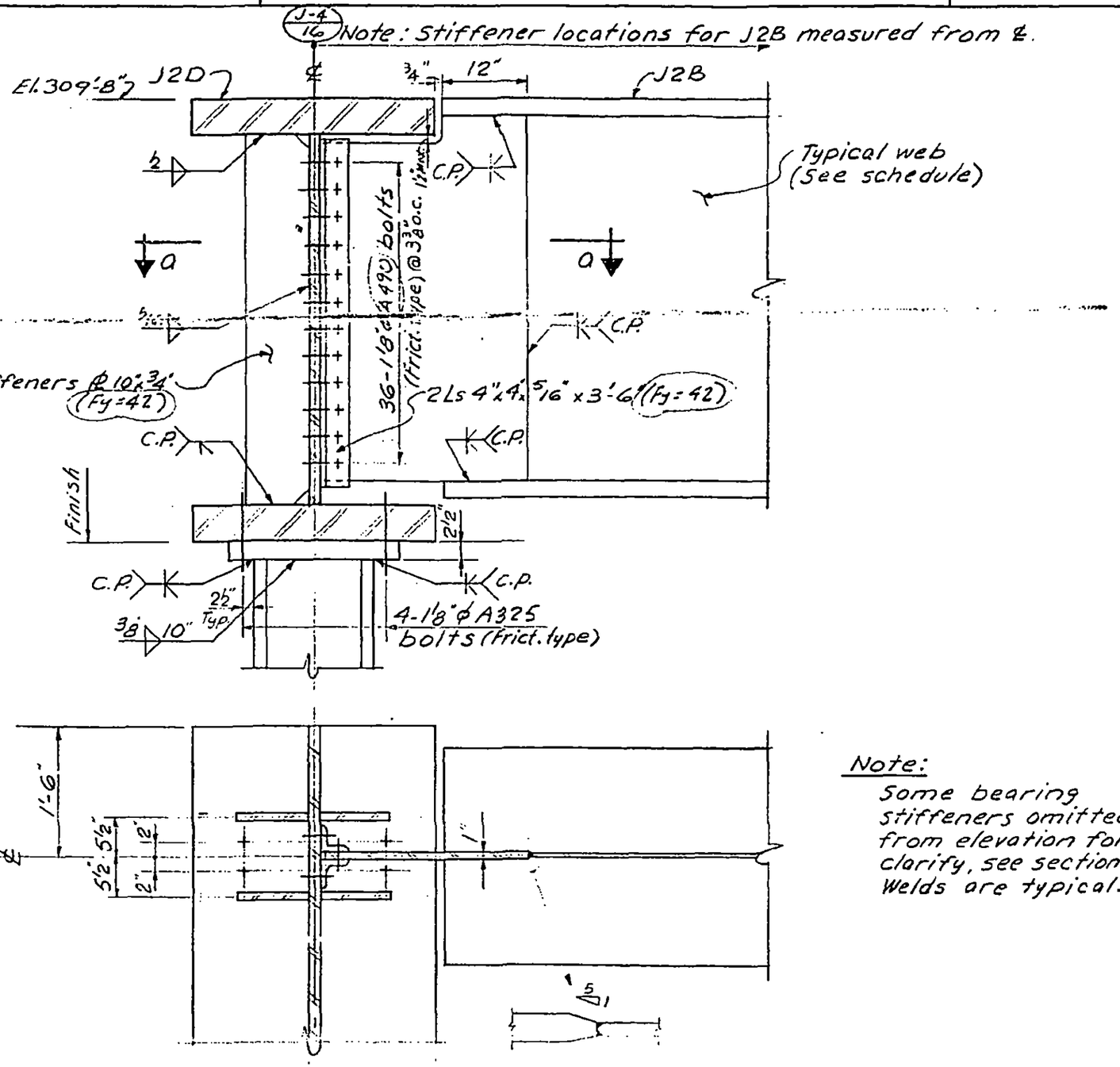

Section a-a

Note:
Some bearing stiffeners omitted from elevation for clarity, see section a-a. Welds are typical.

LICENSED PROFESSIONAL ENGINEER
LESLIE E. ROBERTSON
No. 34360
UNIVERSITY OF THE STATE OF NEW YORK

12-JK2-115

SKILLING - HELLE - CHRISTIANSEN - ROBERTSON Structural & Civil Engineers

PROJECT THE WORLD TRADE CENTER | TITLE GIRDER CONNECTION DETAIL | DATE 5-1-68

REVISIONS

7-19-68

8-30-68

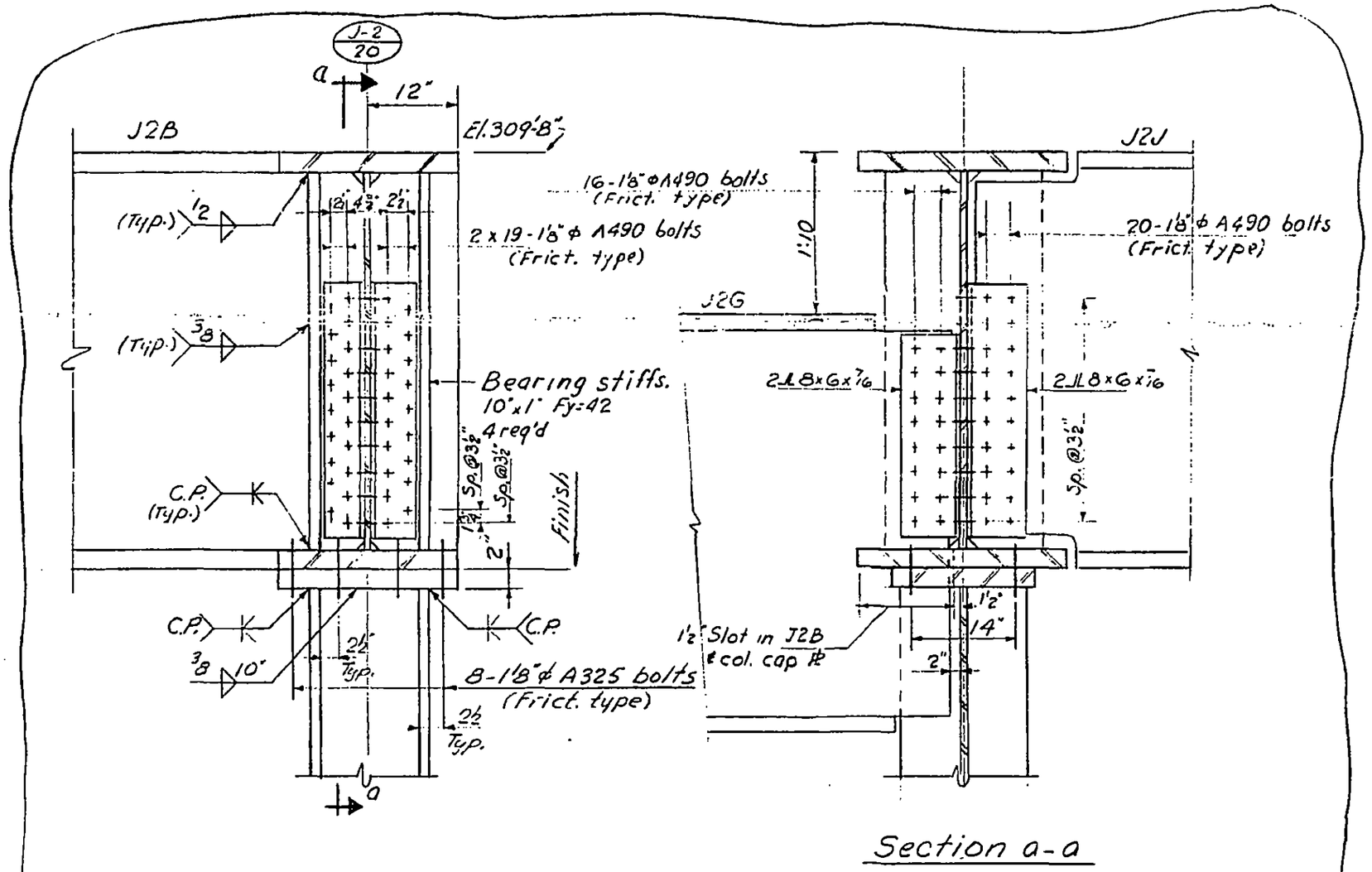

Section a-a

LICENSED PROFESSIONAL ENGINEER
LESLIE E. ROBERTSON
No. 34360
STATE OF NEW YORK

12-JK2-116

SKILLING - HELLE - CHRISTIANSEN - ROBERTSON Structural & Civil Engineers

PROJECT THE WORLD TRADE CENTER | TITLE GIRDER CONNECTION DETAILS | DATE 5-1-68

REVISIONS

7-19-68

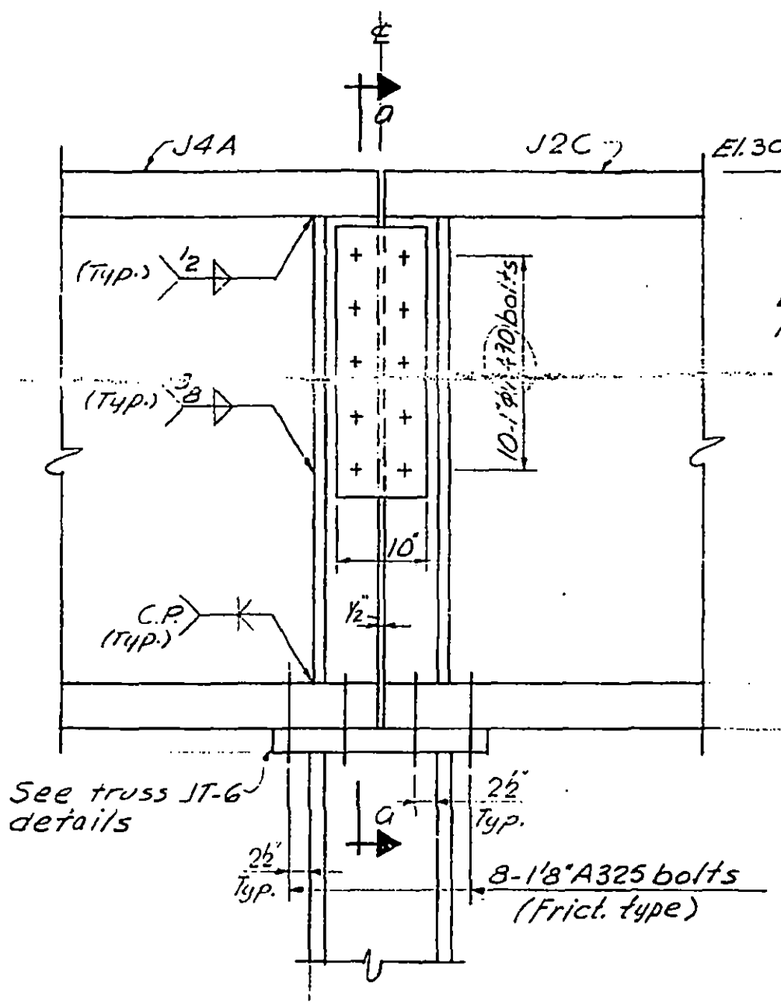

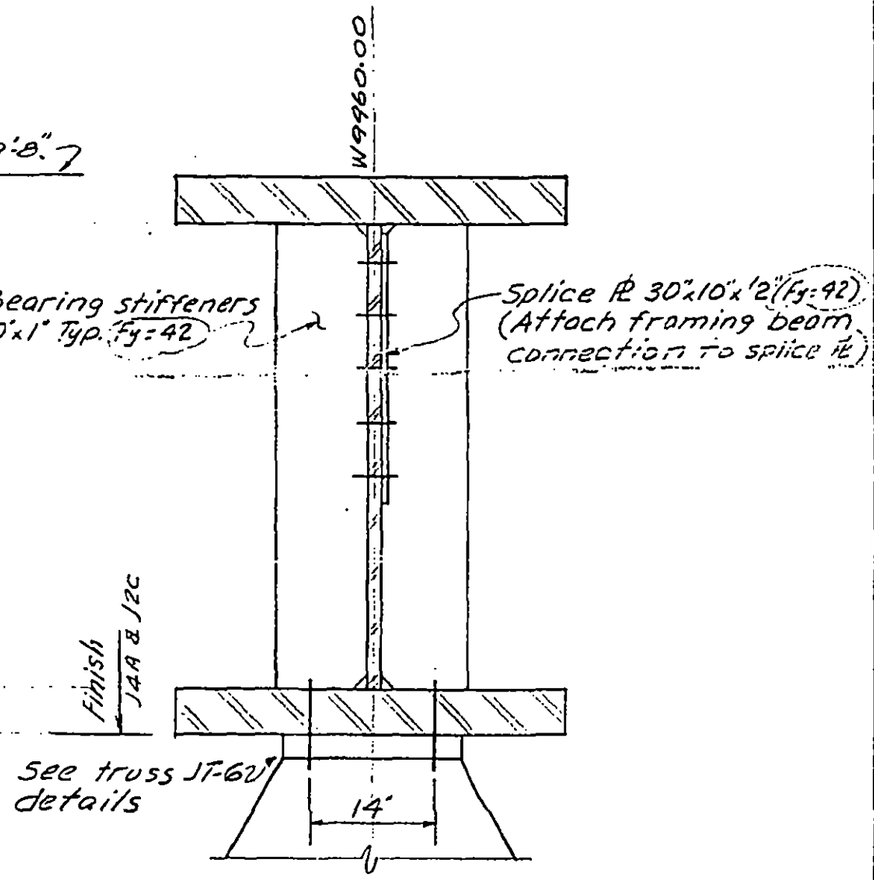

Section a-a

LICENSED PROFESSIONAL ENGINEER
LESLIE E. ROBERTSON
No. 34560
LICENSED BY THE STATE OF NEW YORK

12-JK2-117

SKILLING - HELLE - CHRISTIANSEN - ROBERTSON Structural & Civil Enginoors

PROJECT THE WORLD TRADE CENTER | TITLE GIRDER CONNECTION DETAILS | DATE 5-1-68

REVISIONS

7-19-68

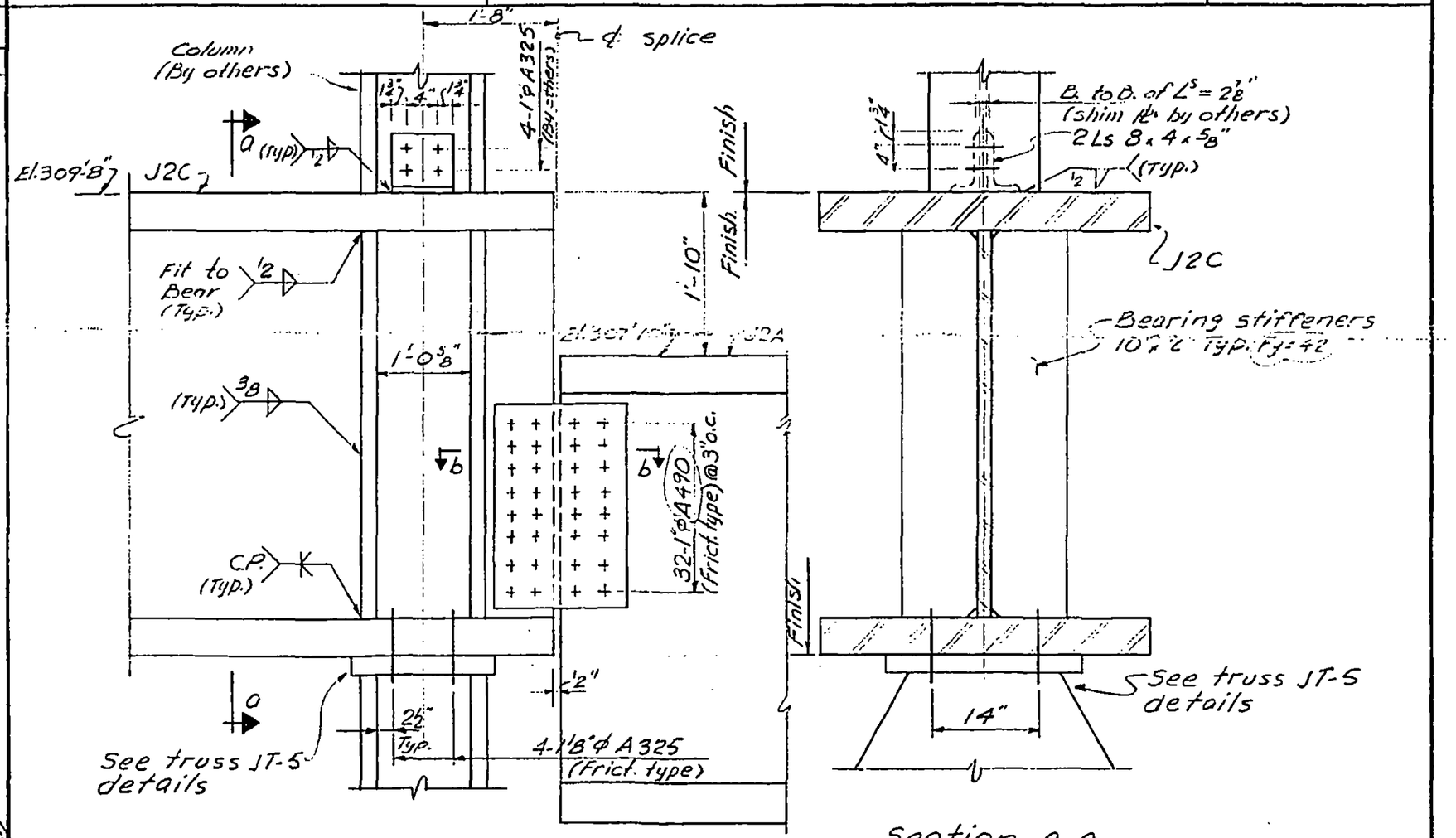

Section 0-0

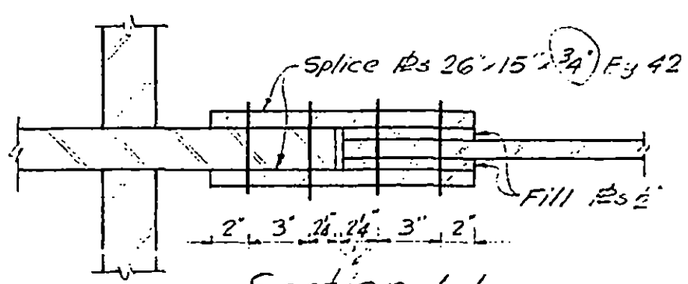

Section 6-6

LICENSED PROFESSIONAL ENGINEER LESLIE E. ROBERTSON No. 34360 UNIVERSITY OF THE STATE OF NEW YORK

12-JK2-118

SKILLING - HELLE - CHRISTIANSEN - ROBERTSON Structural & Civil Engineers

PROJECT THE WORLD TRADE CENTER | TITLE CONNECTION DETAIL | DATE 6-28-68

REVISIONS
11-5-68
1-8-69

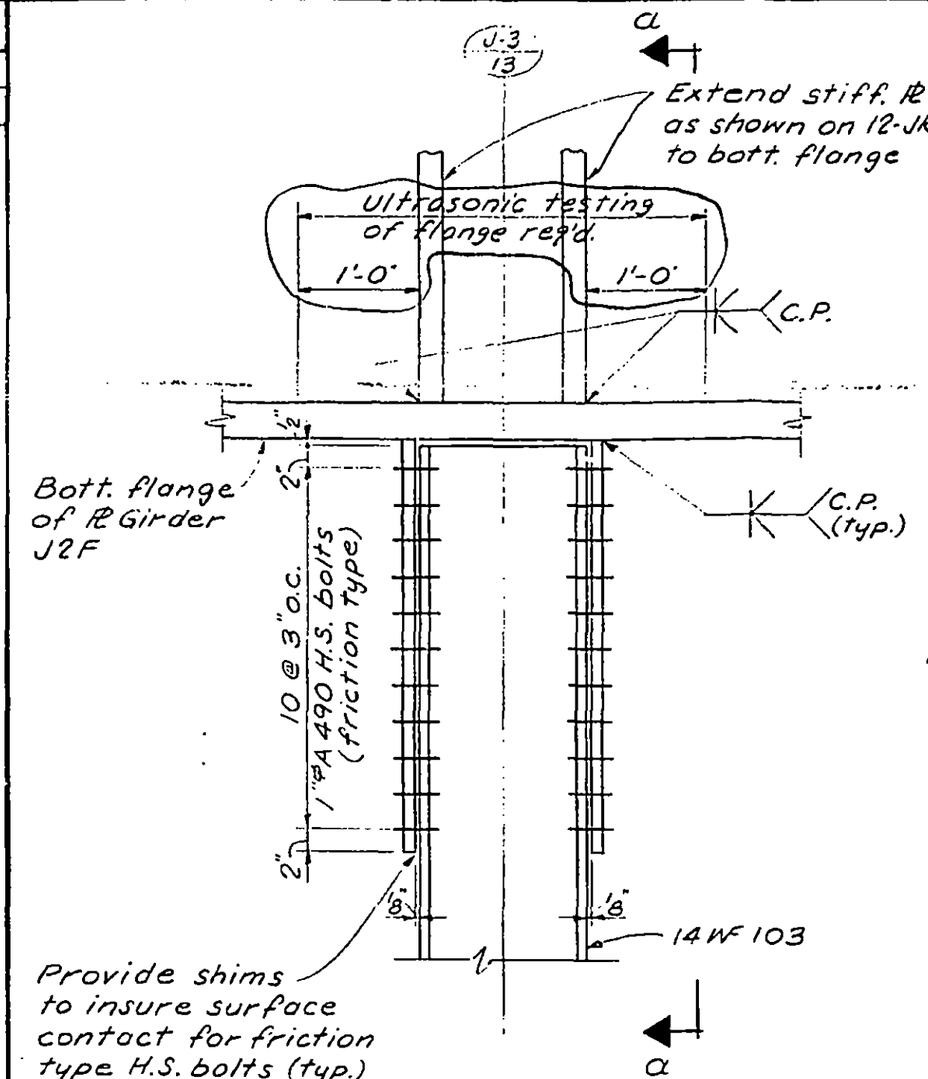

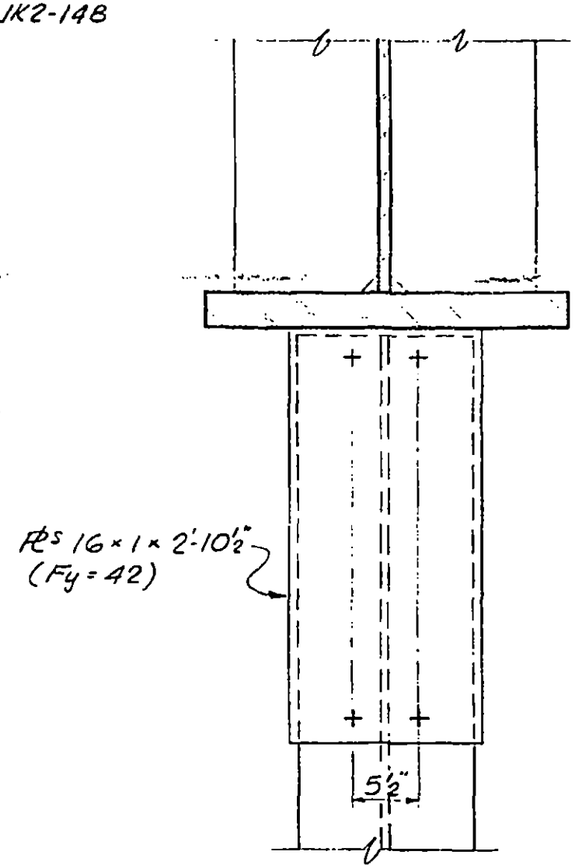

Section a-a

LICENSED PROFESSIONAL ENGINEER
LESLIE E. ROBERTSON
No. 34360
UNIVERSITY OF THE STATE OF NEW YORK

DRAWN
A.F.
REVIEWED
E.L.

12-JK2-118A

SKILLING - HELLE - CHRISTIANSEN - ROBERTSON Structural & Civil Engineers

PROJECT THE WORLD TRADE CENTER | TITLE GIRDER CONNECTION DETAIL | DATE 5-1-68

REVISIONS

6-7-68

7-19-68

9-4-68

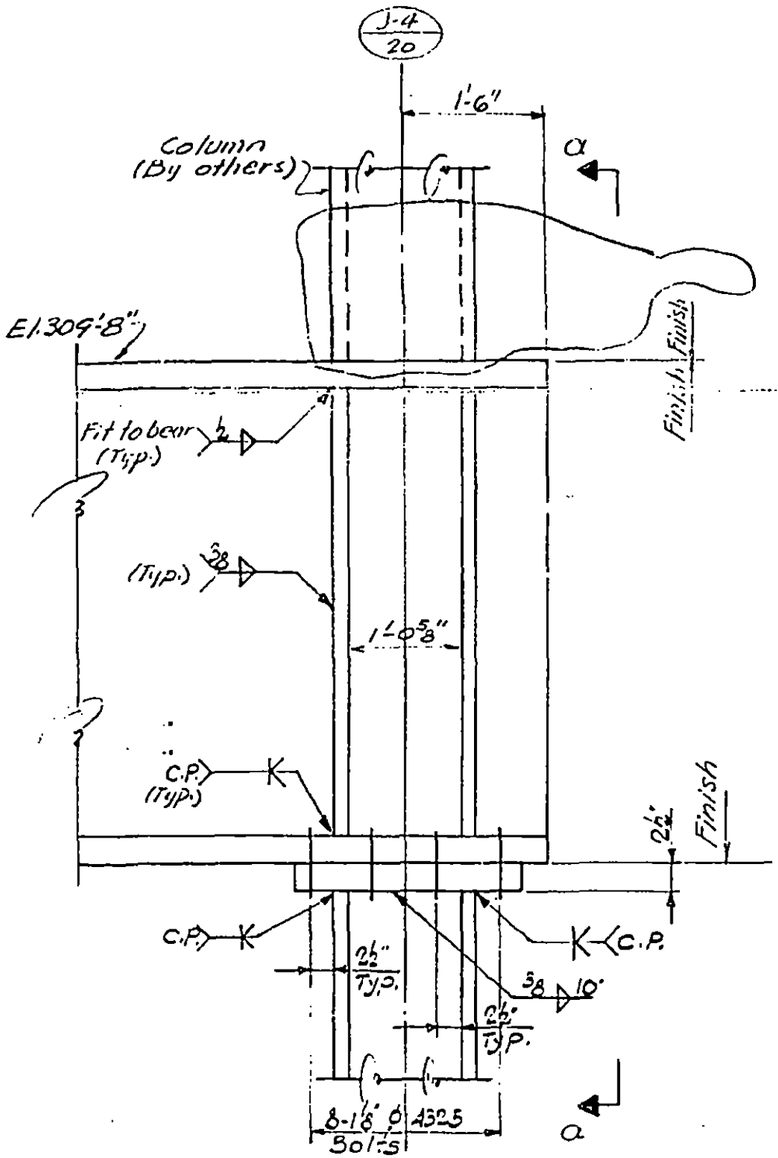

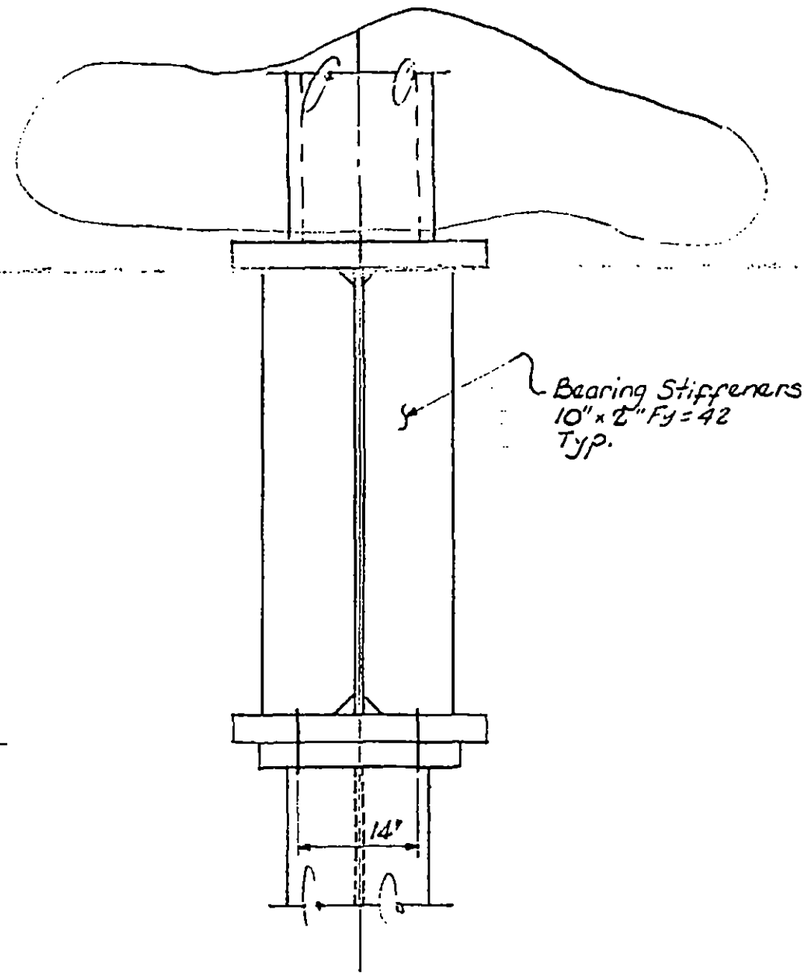

Section a-a

LICENSED PROFESSIONAL ENGINEER
LESLIE E. ROBERTSON
No. 34360
UNIVERSITY OF THE STATE OF NEW YORK

12-JK2-119

SKILLING - HELLE - CHRISTIANSEN - ROBERTSON Structural & Civil Engineers

PROJECT THE WORLD TRADE CENTER | TITLE GIRDER CONNECTION DETAIL | DATE 6-7-68

REVISIONS

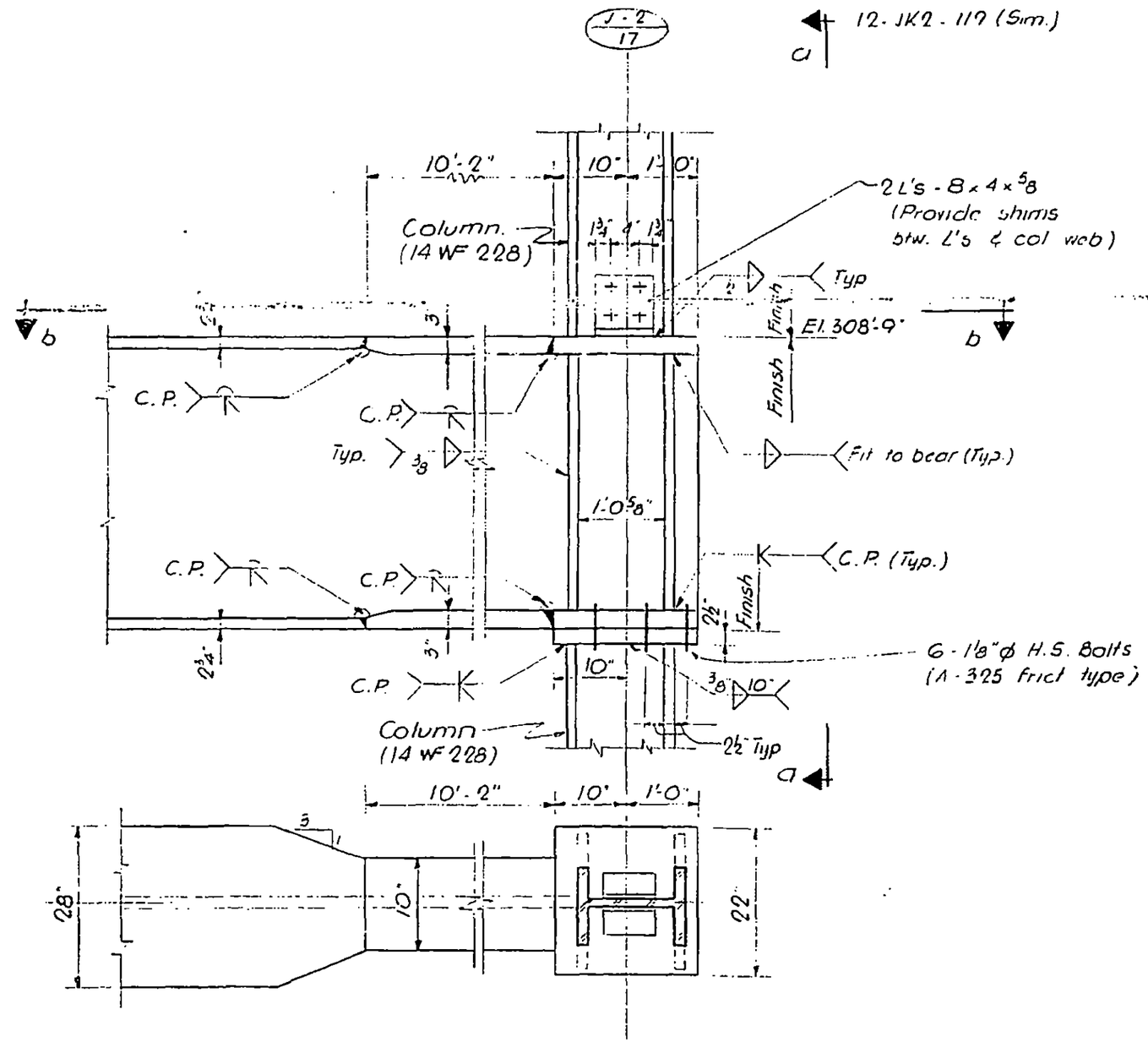

Section b-b

LICENSED PROFESSIONAL ENGINEER LESLIE E. ROBERTSON No. 34360 UNIVERSITY OF THE STATE OF NEW YORK

12-JK2-119A

SKILLING - HELLE - CHRISTIANSEN - ROBERTSON Structural & Civil Engineers

PROJECT THE WORLD TRADE CENTER | TITLE GIRDER CONNECTION DETAILS | DATE 5-1-68

REVISIONS
7-19-68
1-3-69

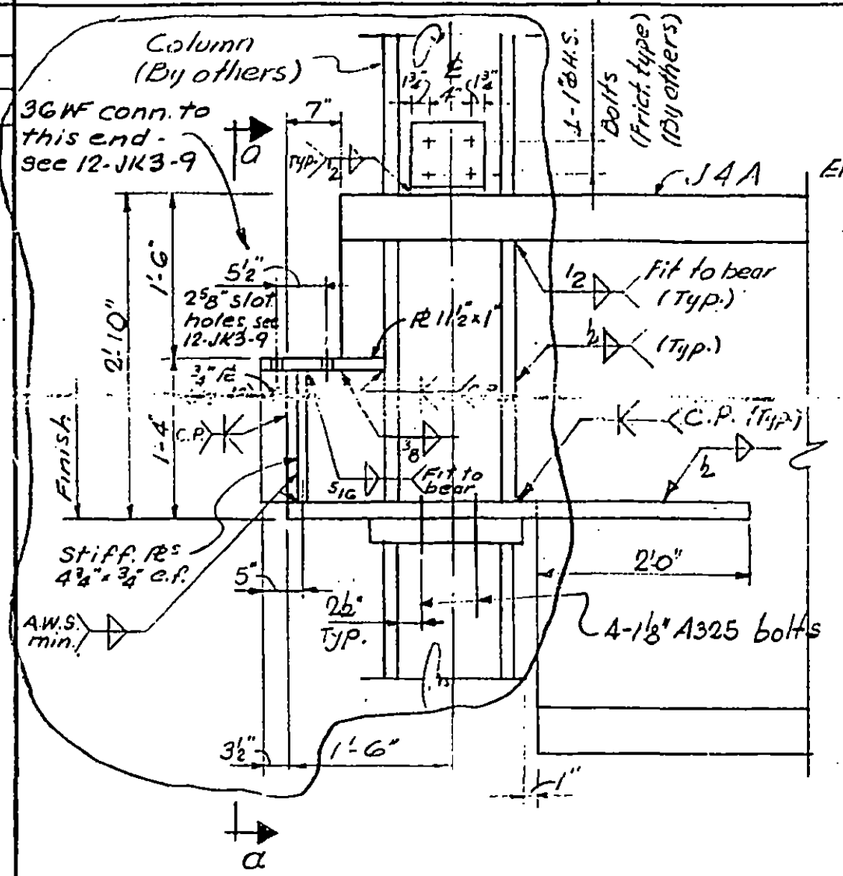

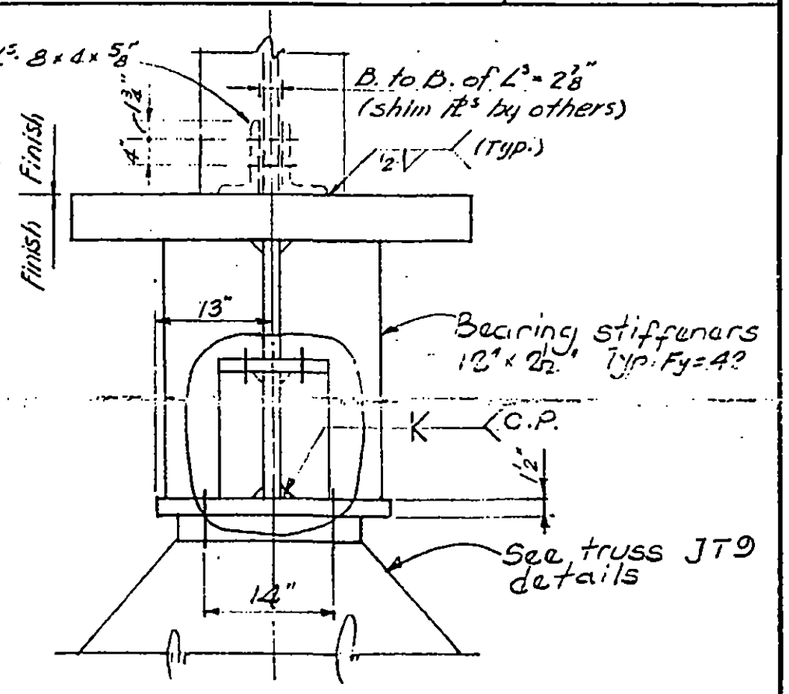

Section a-a

LICENSED PROFESSIONAL ENGINEER
LESLIE E. ROBERTSON
No. 34360
REGISTERED IN THE STATE OF NEW YORK

DRAWN
S.C.
REVIEWED
E.L.

12-JK2-120

SKILLING - HELLE - CHRISTIANSEN - ROBERTSON Structural & Civil Engineers

PROJECT THE WORLD TRADE CENTER | TITLE GIRDER CONNECTION DETAIL | DATE 5-1-68

REVISIONS
7-19-68
8-30-68
11-5-68

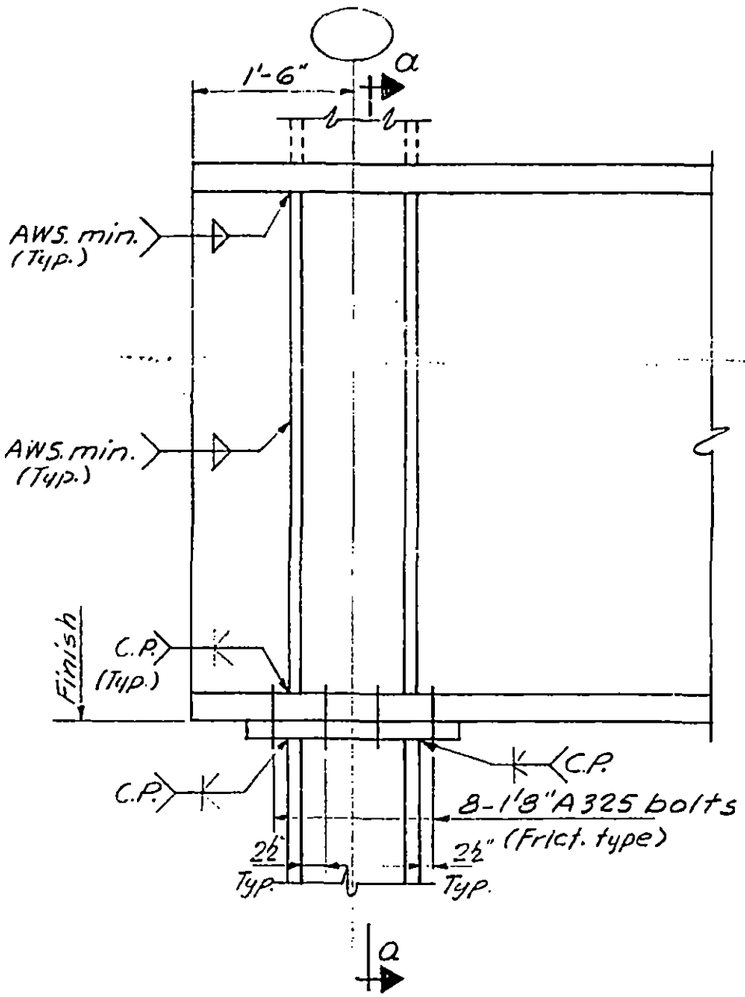

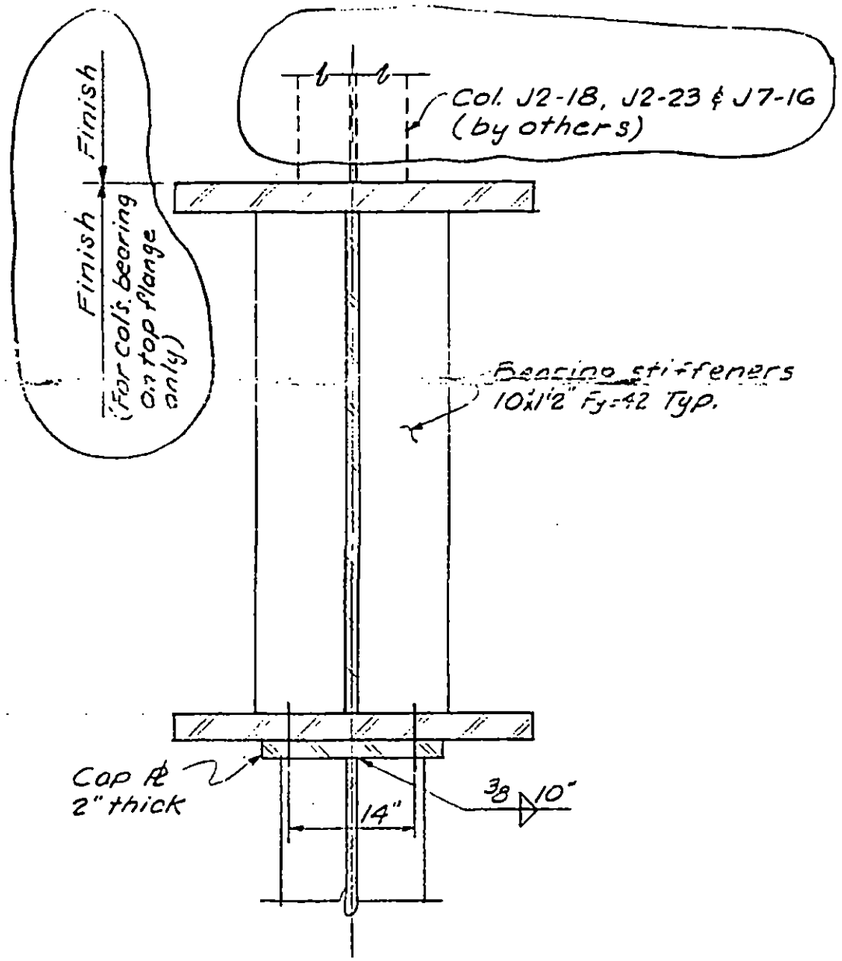

Section a-a

LICENSED PROFESSIONAL ENGINEER
LESLIE E. ROBERTSON
No. 34360
THE STATE OF NEW YORK

12-JK2-121

SKILLING, HELLE, CHRISTIANSEN, ROBERTSON — Structural & Civil Engineers

PROJECT: THE WORLD TRADE CENTER | TITLE: GIRDER CONNECTION DETAIL | DATE: 3-17-69

REVISIONS

4-18-69

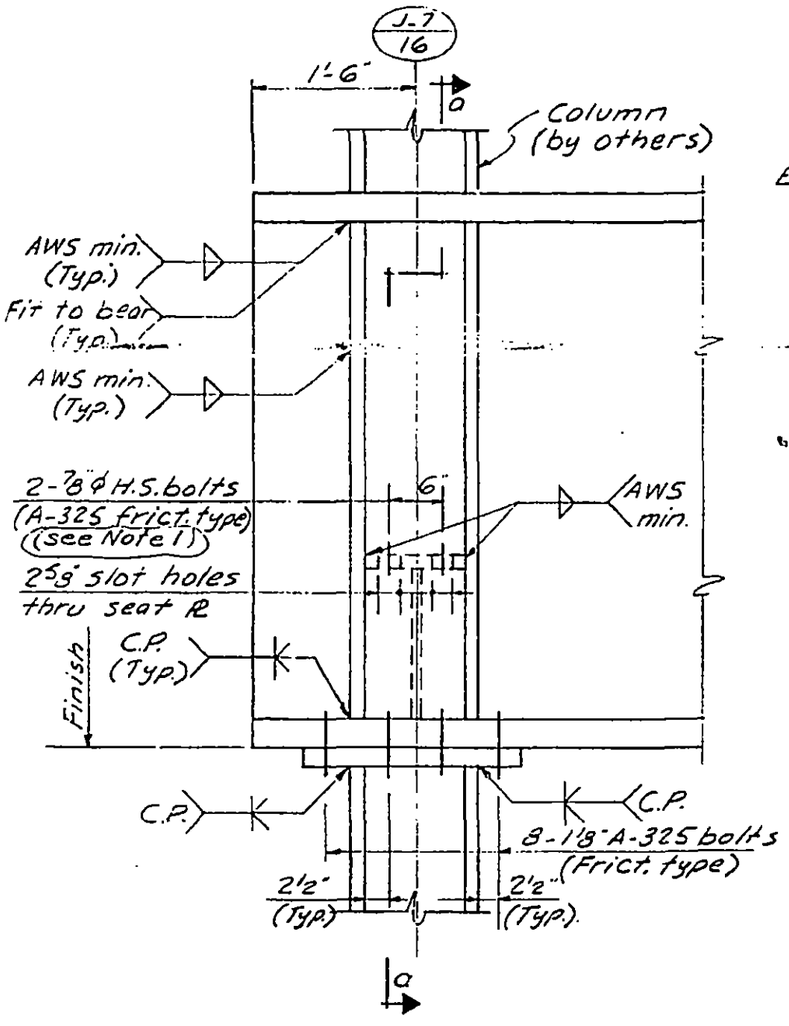

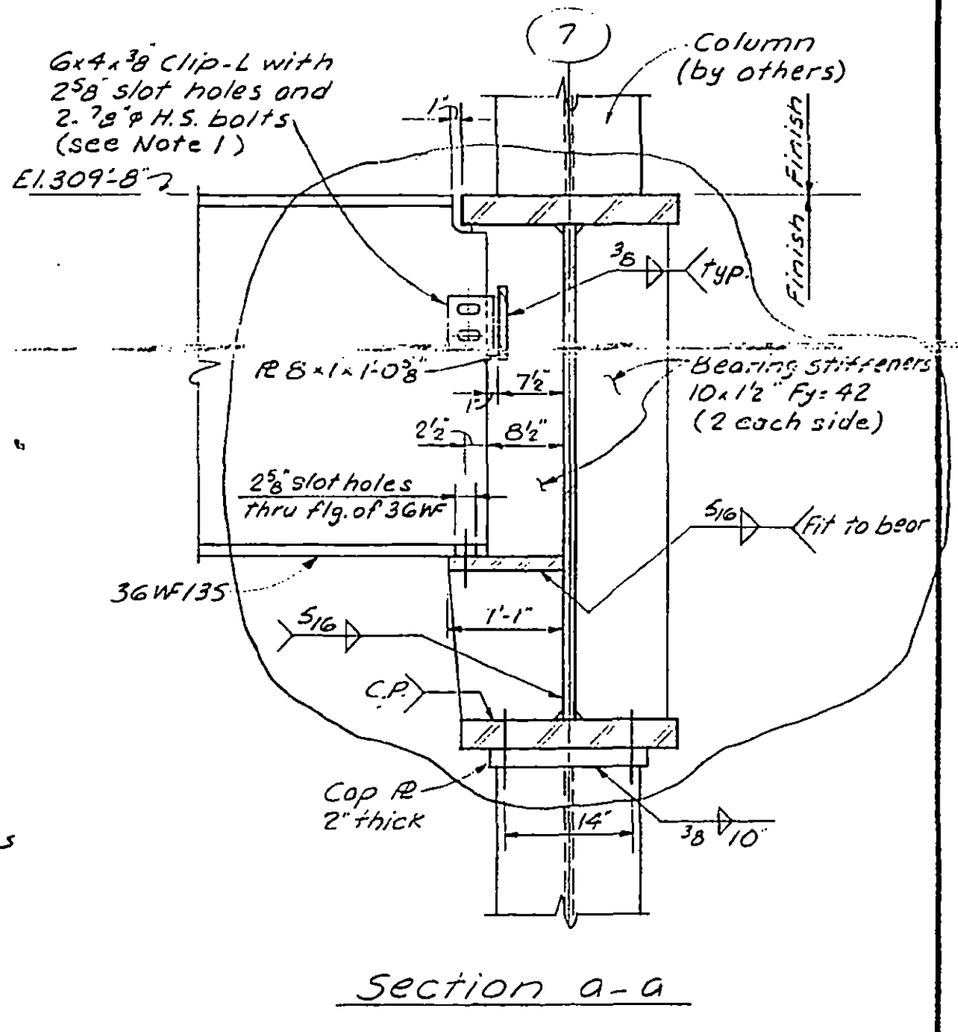

Section a-a

Notes:

1. Tighten all bolts only after pouring concrete to the strip of Const. Jt. as shown on plan.

LICENSED PROFESSIONAL ENGINEER — LESLIE E. ROBERTSON — No. 34360 — UNIVERSITY OF THE STATE OF NEW YORK

DESIGNED

DRAWN: A.L. FRANQUI

REVIEWED: E.L.

12-JK2-121A

SKILLING - HELLE - CHRISTIANSEN - ROBERTSON Structural & Civil Engineers

PROJECT THE WORLD TRADE CENTER | TITLE GIRDER CONNECTION DETAIL | DATE 5-1-68

REVISIONS
7-19-68
9-4-68
12-3-68

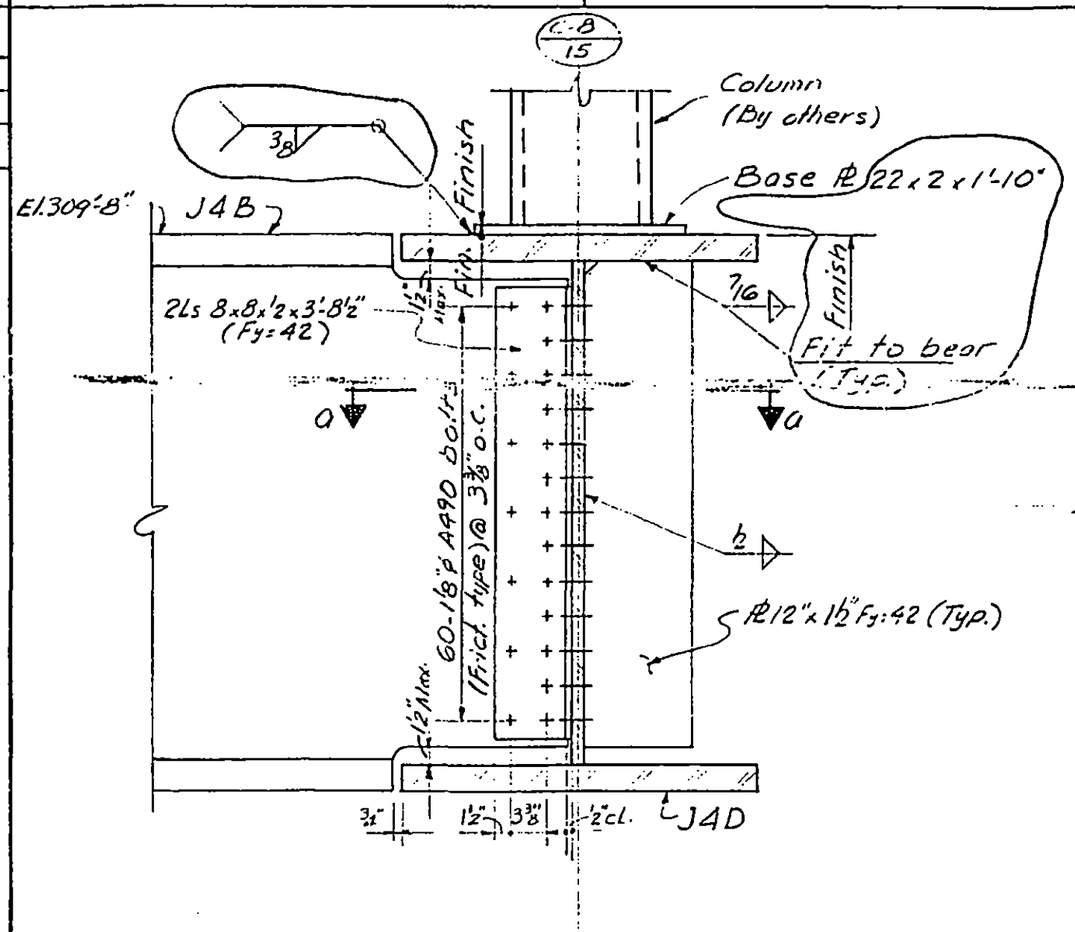

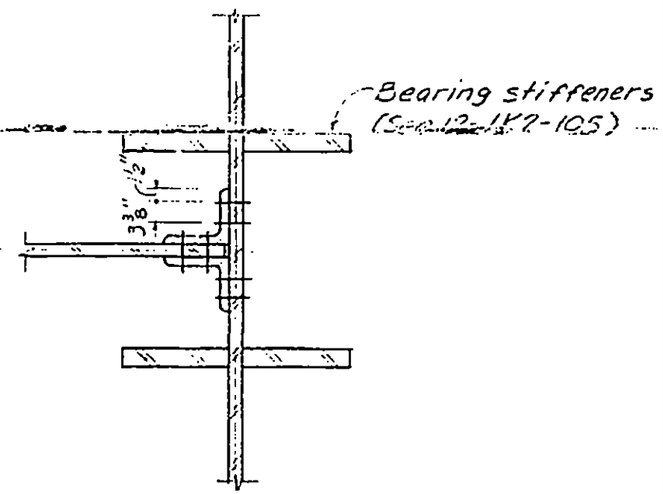

Section a-a

Note:
Some bearing stiffeners omitted from elevation for clarity. see Section a-a.

LICENSED PROFESSIONAL ENGINEER
LESLIE E. ROBERTSON
No. 34360
UNIVERSITY OF THE STATE OF NEW YORK

12-JK2-122

SKILLING - HELLE - CHRISTIANSEN - ROBERTSON Structural & Civil Engineers

PROJECT THE WORLD TRADE CENTER | TITLE GIRDER CONNECTION DETAIL | DATE 5-1-68

REVISIONS

6-28-68

7-19-68

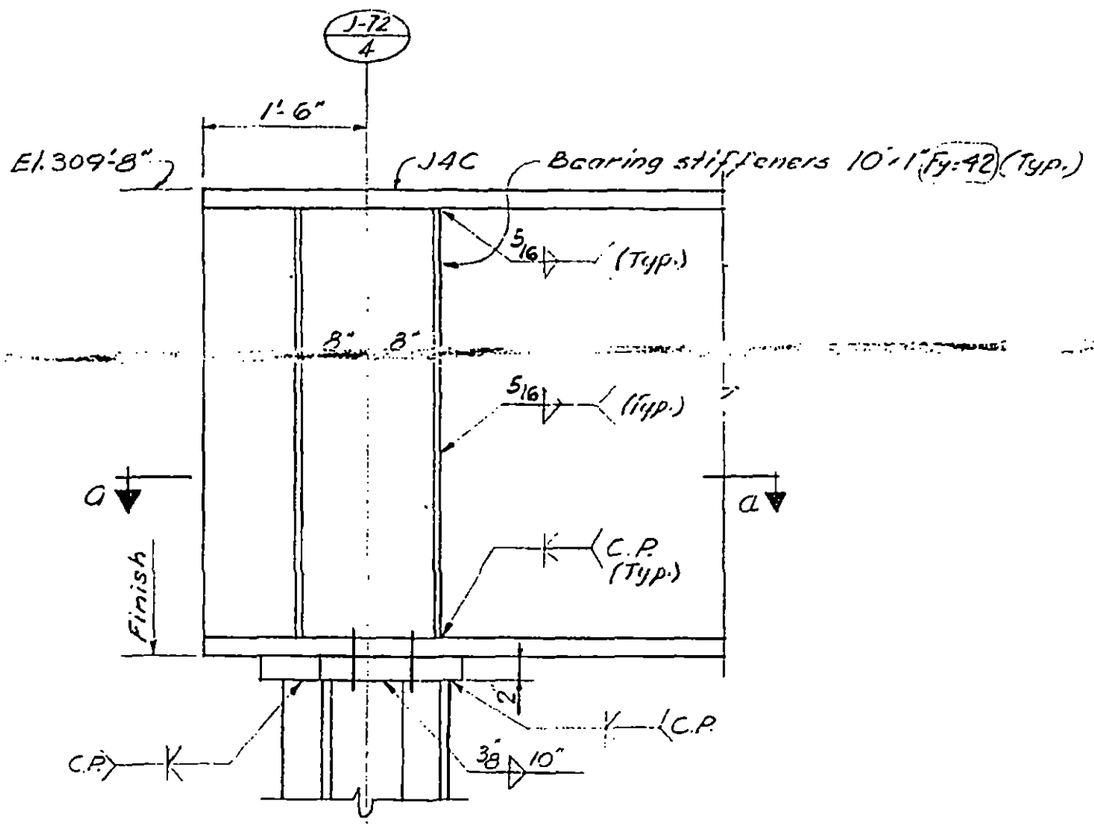

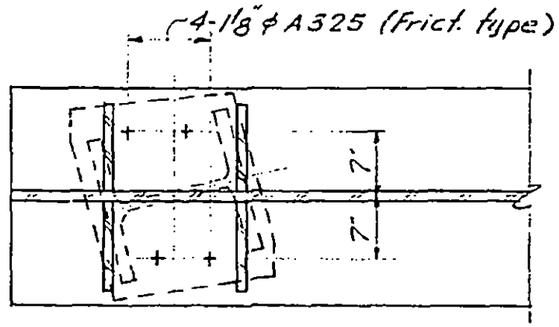

Section a-a

Note:
This detail similar to detail 12-JK2-128 except bolts must match skewed column as shown in section a-a

LICENSED PROFESSIONAL ENGINEER
LESLIE E. ROBERTSON
No. 34360
UNIVERSITY OF THE STATE OF NEW YORK

12-JK2-123

SKILLING - HELLE - CHRISTIANSEN - ROBERTSON Structural & Civil Engineers

PROJECT THE WORLD TRADE CENTER | TITLE GIRDER CONNECTION DETAIL | DATE 5-1-68

REVISIONS

7-19-68

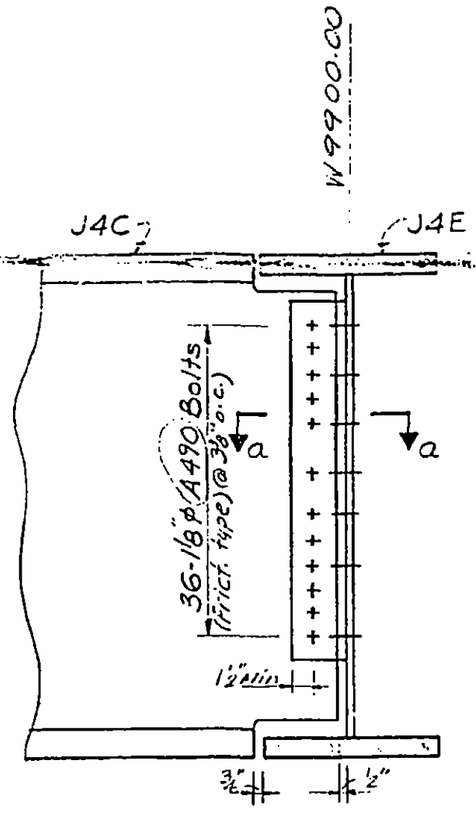

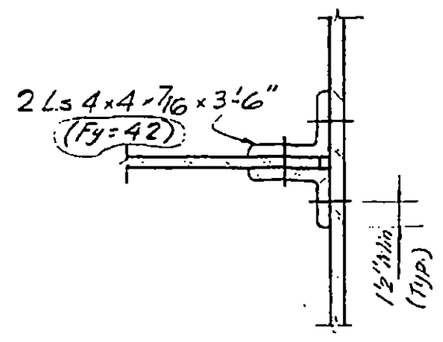

Section a-a

LICENSED PROFESSIONAL ENGINEER
LESLIE E. ROBERTSON
No. 34360
UNIVERSITY OF THE STATE OF NEW YORK

12-JK2-124

SKILLING - HELLE - CHRISTIANSEN - ROBERTSON Structural & Civil Engineers

PROJECT THE WORLD TRADE CENTER | TITLE GIRDER CONNECTION DETAIL | DATE 5-1-68

REVISIONS

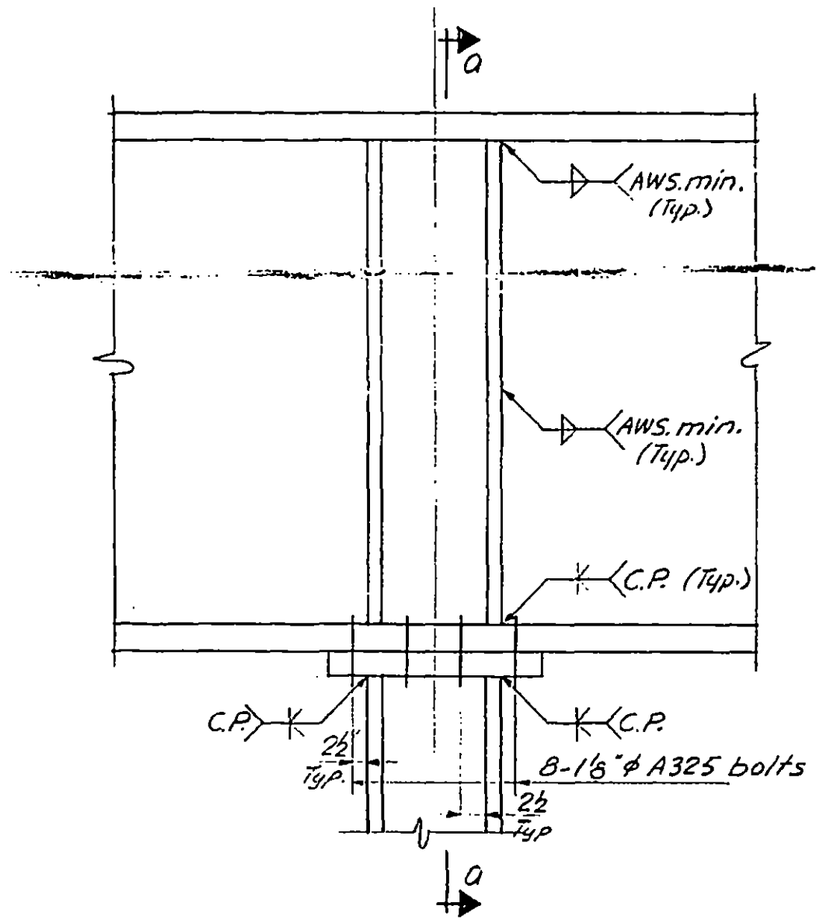

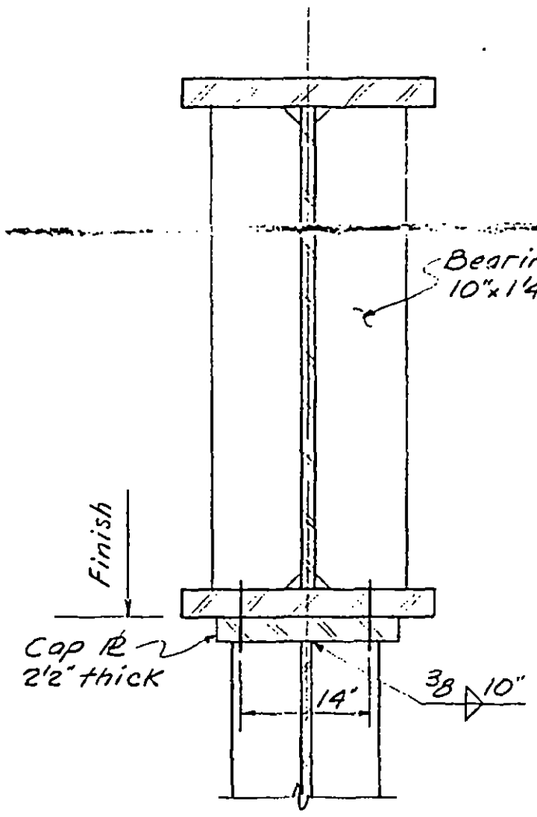

Section a-a

LICENSED PROFESSIONAL ENGINEER
LESLIE E. ROBERTSON
No. 34360
STATE OF NEW YORK

12-JK2-125

SKILLING - HELLE - CHRISTIANSEN - ROBERTSON Structural & Civil Engineers

PROJECT THE WORLD TRADE CENTER | TITLE GIRDER CONNECTION DETAIL | DATE 5-1-68

REVISIONS

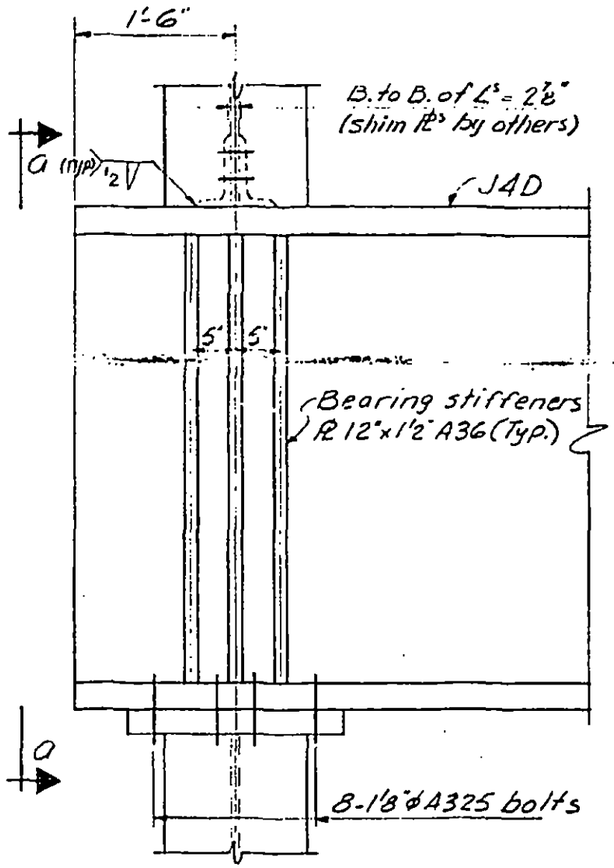

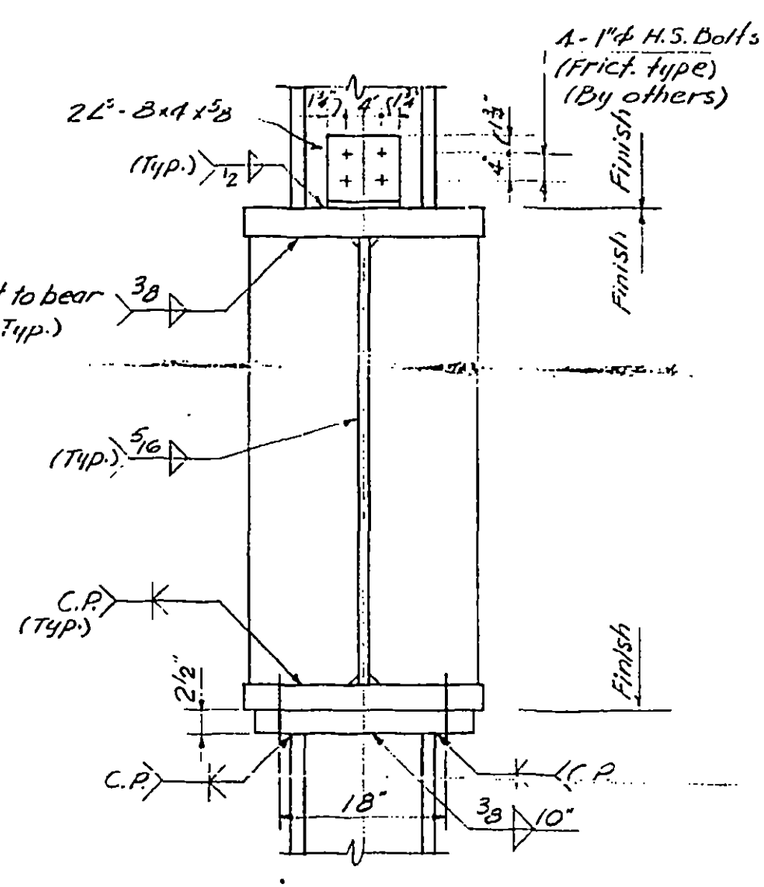

Section a-a

REGISTERED PROFESSIONAL ENGINEER
LESLIE E. ROBERTSON
No. 50300
STATE OF NEW YORK

12-JK2-126

SKILLING, HELLE, CHRISTIANSEN, ROBERTSON Structural & Civil Engineers

PROJECT THE WORLD TRADE CENTER | TITLE GIRDER CONNECTION DETAIL | DATE 1-20-69

REVISIONS

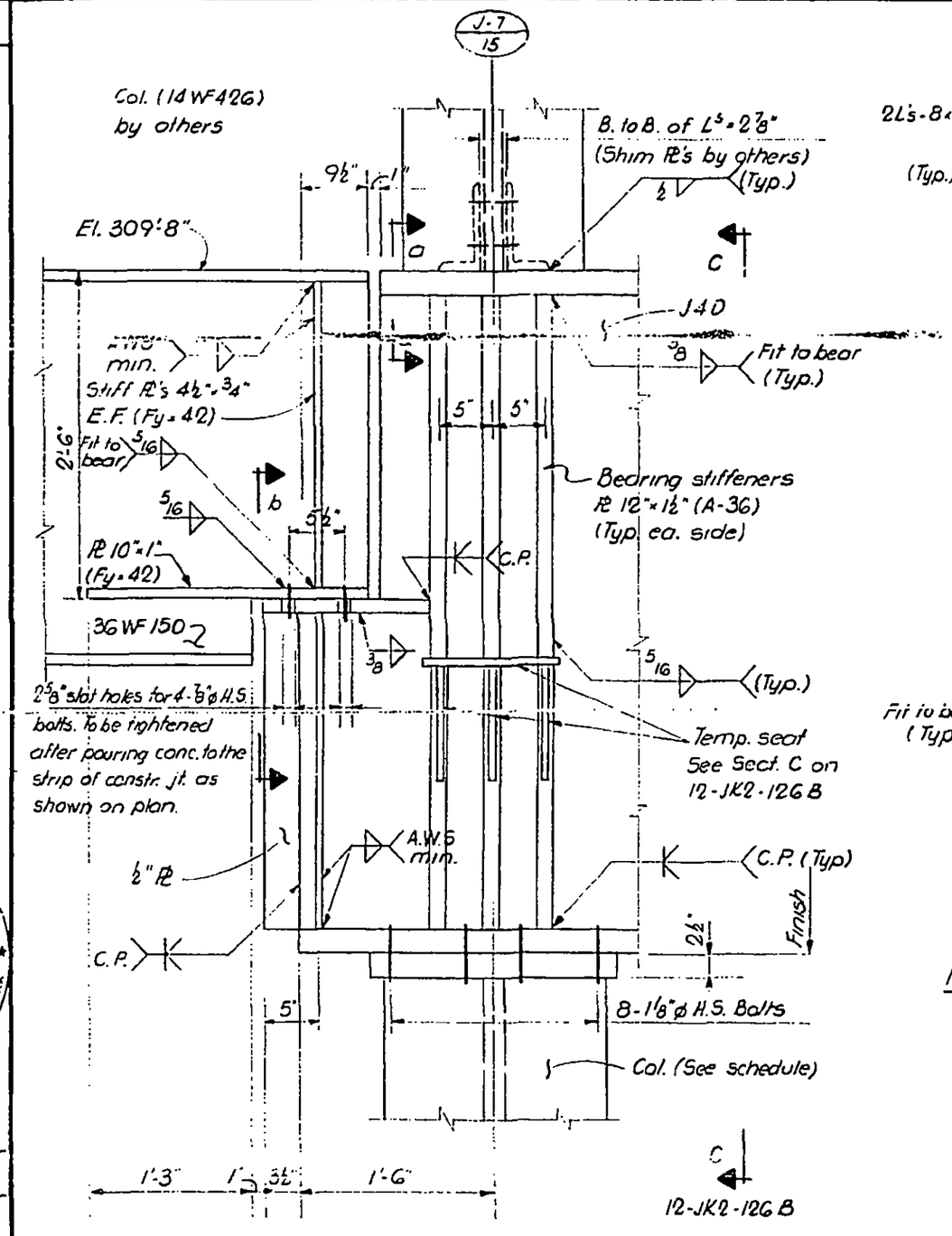

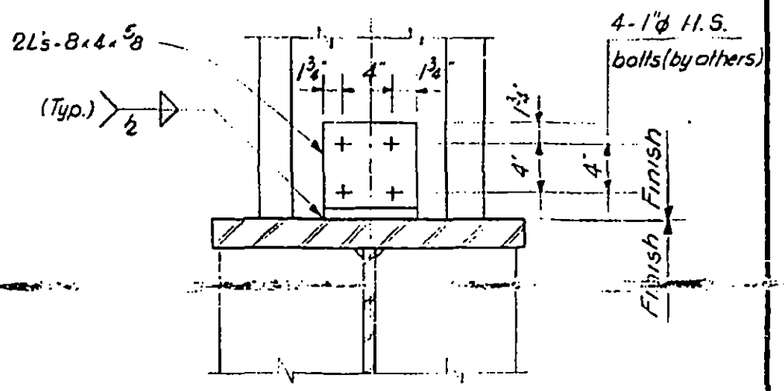

Section a-a

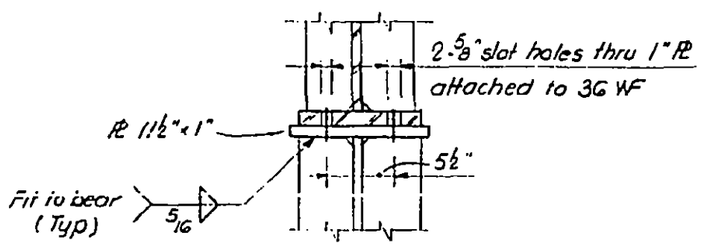

Section b-b

Notes:

1. All H.S. bolts to be A-325 friction type, except as noted
2. All welds to be E 70xx.
3. Provide washers 2½ x 5/8 (square or round) with fy=50 ksi for all bolts over slot holes

LICENSED PROFESSIONAL ENGINEER
LESLIE E. ROBERTSON
No. 34360
UNIVERSITY OF THE STATE OF NEW YORK

DRAWN G. T. H.
REVIEWED E. L.

12-JK2-126A

SKILLING, HELLE, CHRISTIANSEN, ROBERTSON — Structural & Civil Engineers

PROJECT: THE WORLD TRADE CENTER | TITLE: GIRDER CONNECTION DETAIL | DATE: 1-20-69

REVISIONS

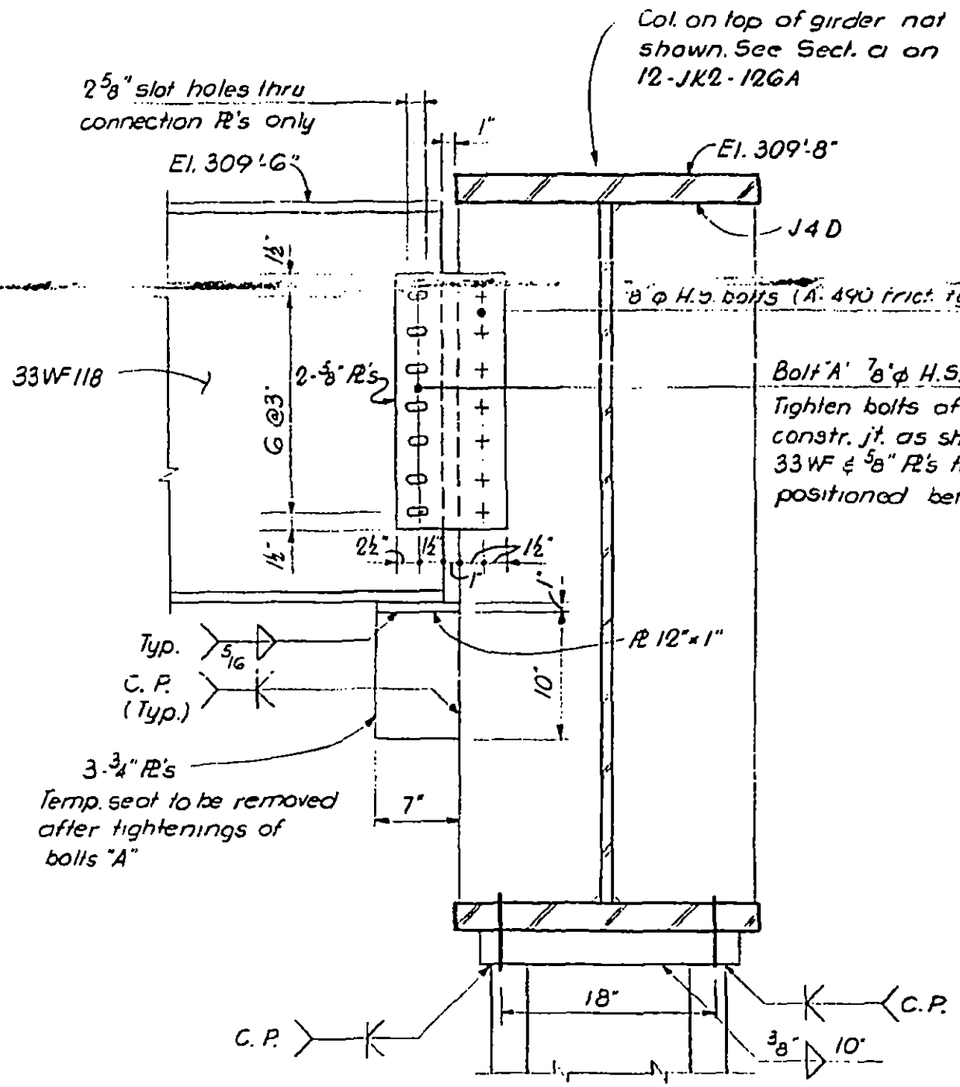

Section C-C

Bolt 'A' 7/8"ø H.S. bolts (A-490 fricl. type)
Tighten bolts after pouring conc. to the strip of constr. jt. as shown on plan. Shim Pl's btw. 33WF & 5/8" Pl's to be field measured and positioned before tightening of bolts.

Notes:

1. All welds to be E70xx.
2. Provide washers 2 1/2 x 5/8 (square or round) with fy=50 ksi for all bolts over slot holes.

LICENSED PROFESSIONAL ENGINEER — LESLIE E. ROBERTSON — No. 34360 — UNIVERSITY OF THE STATE OF NEW YORK

DESIGNED

DRAWN: G. T. H.

REVIEWED: E.L.

12-JK2-126B

SKILLING - HELLE - CHRISTIANSEN - ROBERTSON Structural & Civil Engineers

PROJECT THE WORLD TRADE CENTER | TITLE GIRDER CONNECTION DETAIL | DATE 5-1-68

REVISIONS

7-19-68

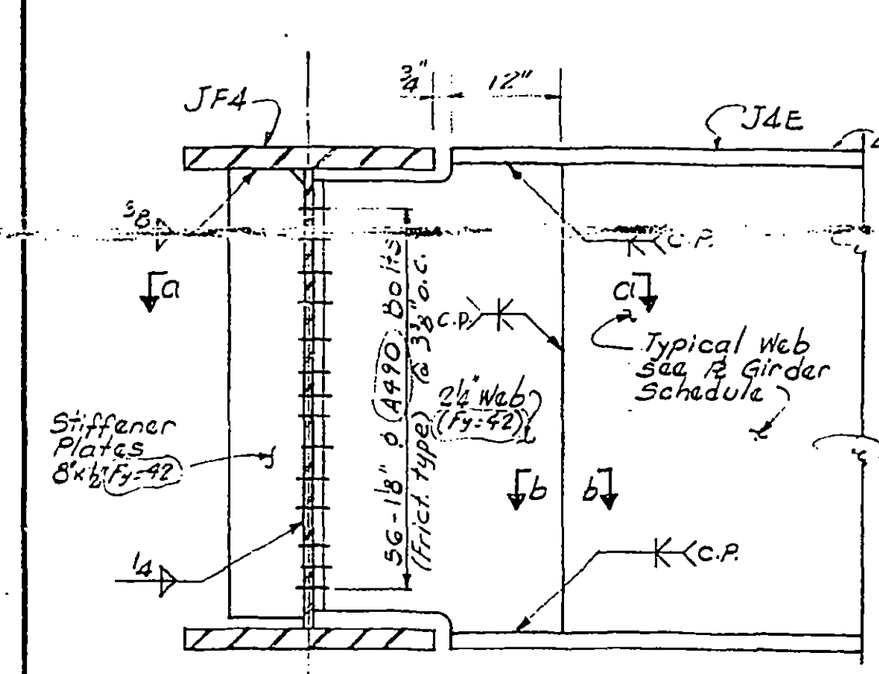

Note:
Some stiffeners omitted from elevation for clarity, see section a-a

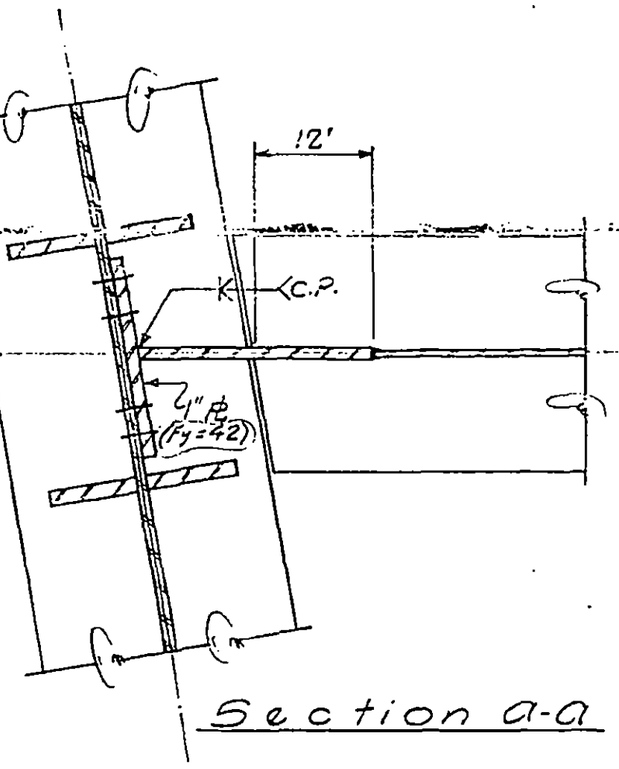

Section a-a

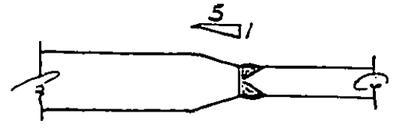

Section b-b

LICENSED PROFESSIONAL ENGINEER
LESLIE E. ROBERTSON
No. 34360
STATE OF NEW YORK

12-JK2-127

SKILLING - HELLE - CHRISTIANSEN - ROBERTSON Structural & Civil Engineers

PROJECT THE WORLD TRADE CENTER | TITLE GIRDER CONNECTION DETAIL | DATE 5-1-68

REVISIONS

6-28-68

7-19-68

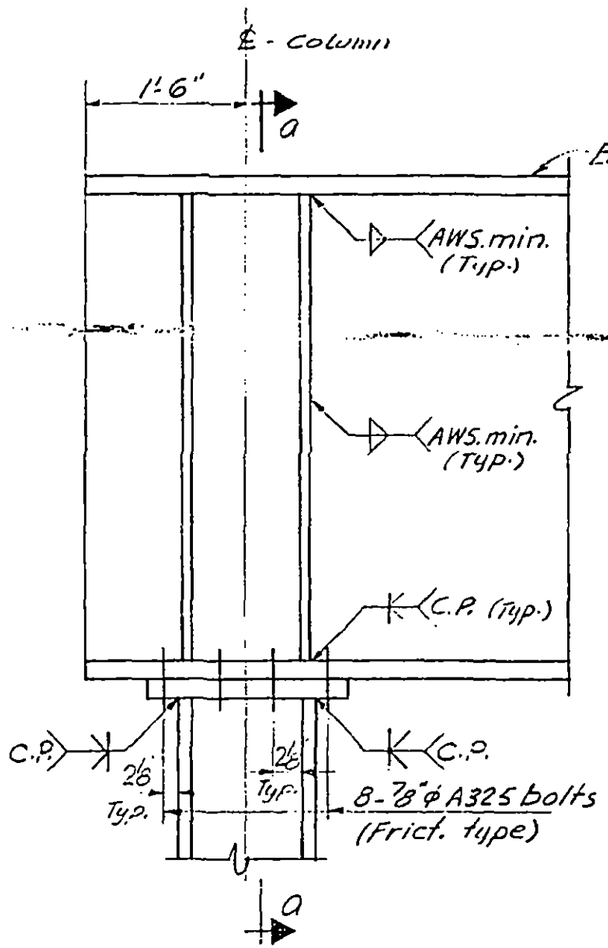

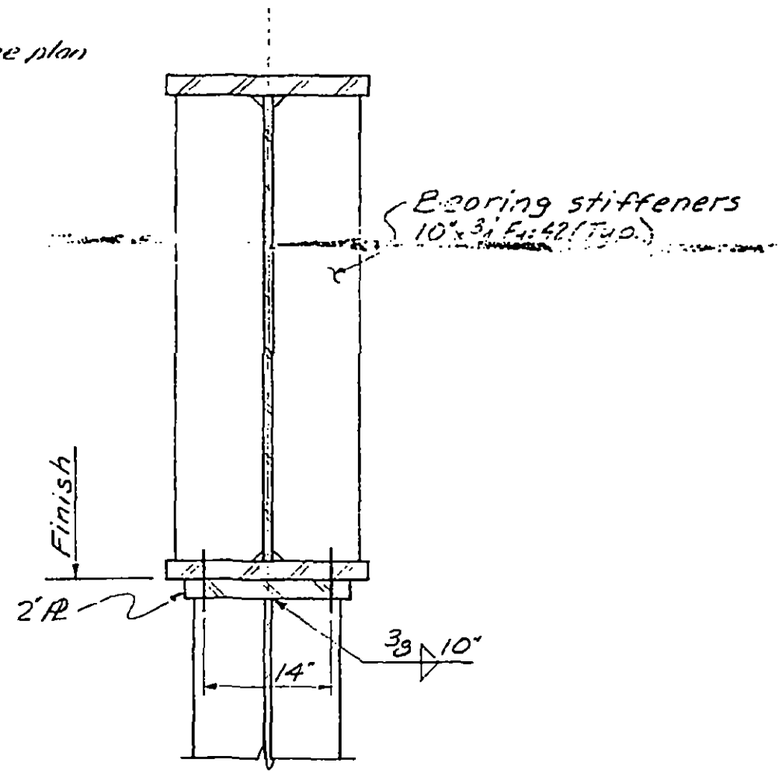

Section a-a

LICENSED PROFESSIONAL ENGINEER LESLIE E. ROBERTSON No. 34360 STATE OF NEW YORK

12-JK2-128

SKILLING, HELLE, CHRISTIANSEN, ROBERTSON — Structural & Civil Engineers

PROJECT: THE WORLD TRADE CENTER | TITLE: GIRDER CONNECTION DETAIL | DATE: 1-20-69

REVISIONS

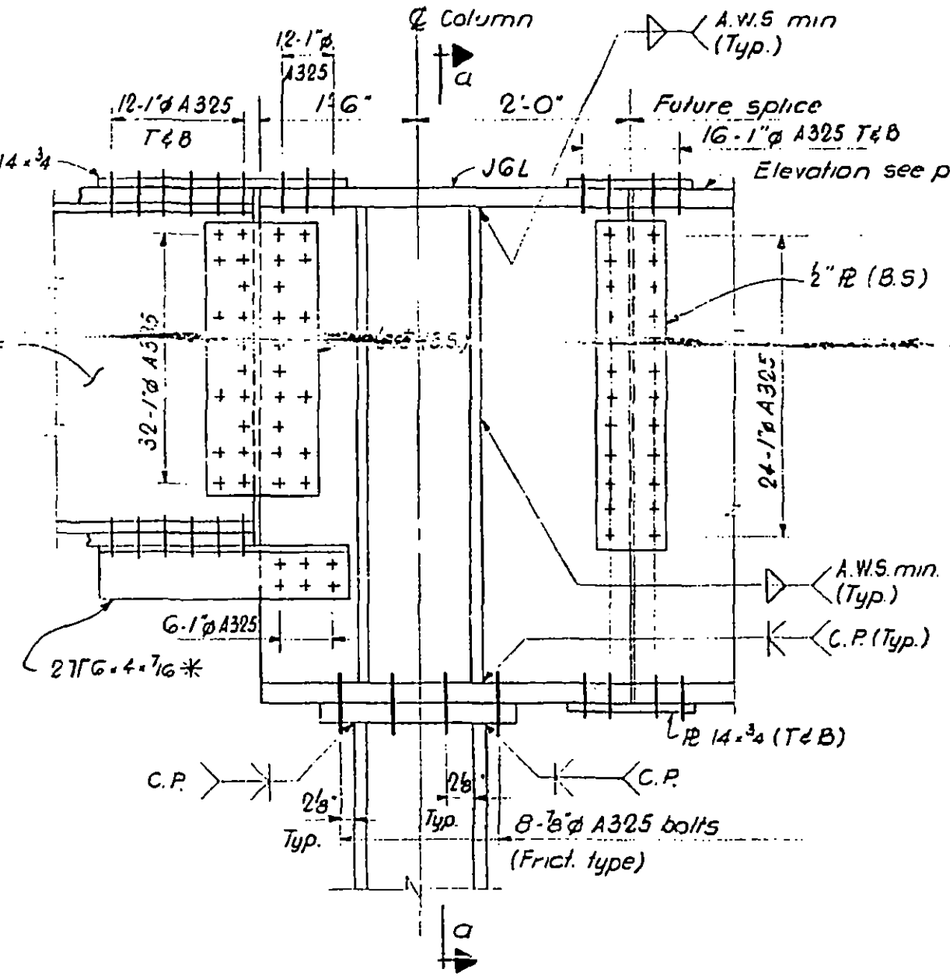

* Remove 2 TG 4x4 after "future splice" has been completed

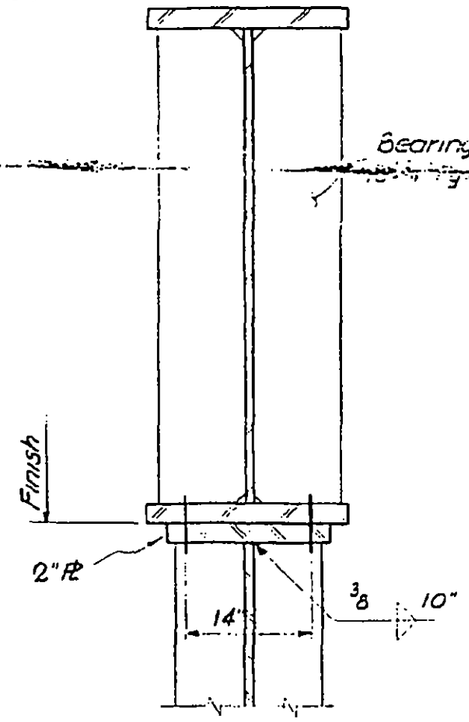

Section a-a

LICENSED PROFESSIONAL ENGINEER — LESLIE E. ROBERTSON — No. 34360 — UNIVERSITY OF THE STATE OF NEW YORK

DESIGNED

DRAWN: G.T.H.

REVIEWED: E.L.

12-JK2-128 A

SKILLING - HELLE - CHRISTIANSEN - ROBERTSON Structural & Civil Engineers

PROJECT THE WORLD TRADE CENTER | TITLE GIRDER CONNECTION DETAIL | DATE 5-1-68

REVISIONS

6-28-68

7-19-68

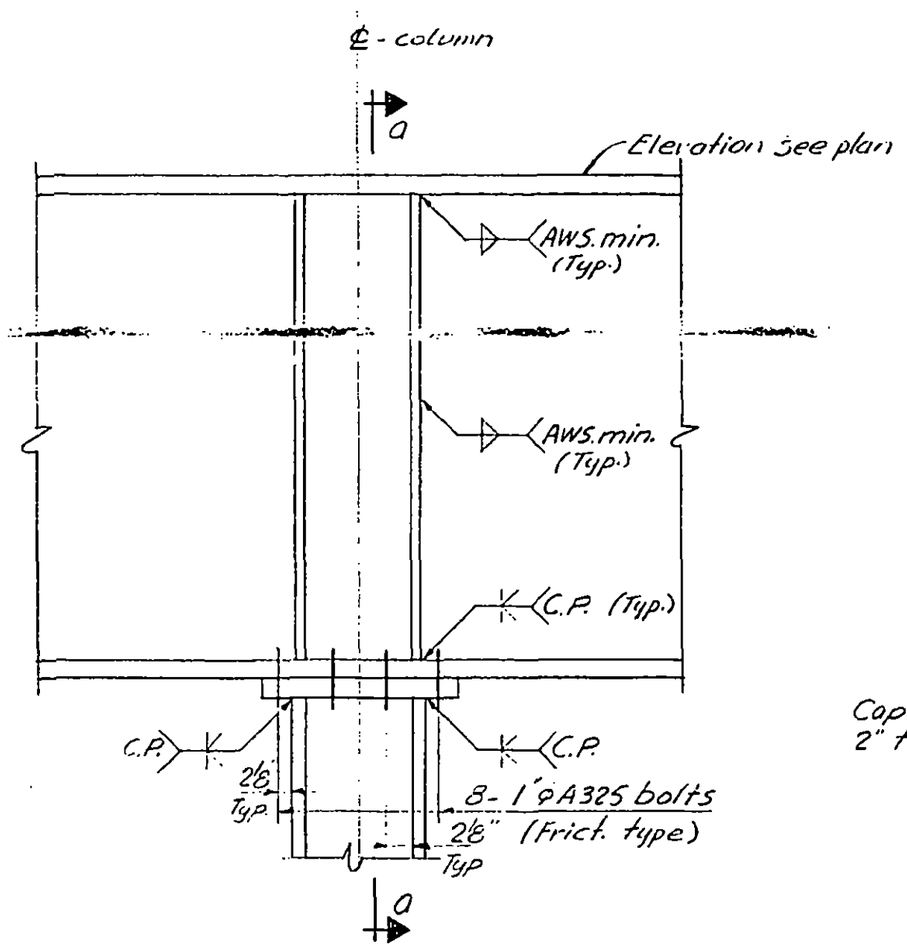

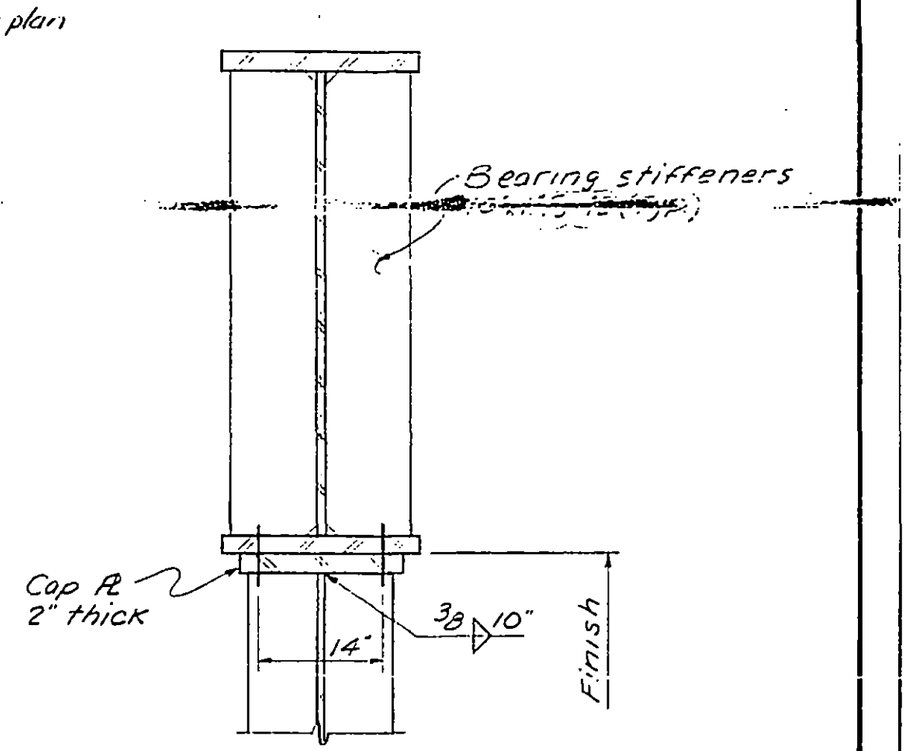

Section a-a

LESLIE E. ROBERTSON No. 34360

12-JK2-129

SKILLING - HELLE - CHRISTIANSEN - ROBERTSON Structural & Civil Engineers

PROJECT THE WORLD TRADE CENTER | TITLE GIRDER CONNECTION DETAIL | DATE 5-1-68

REVISIONS

G-7-68

6-28-68

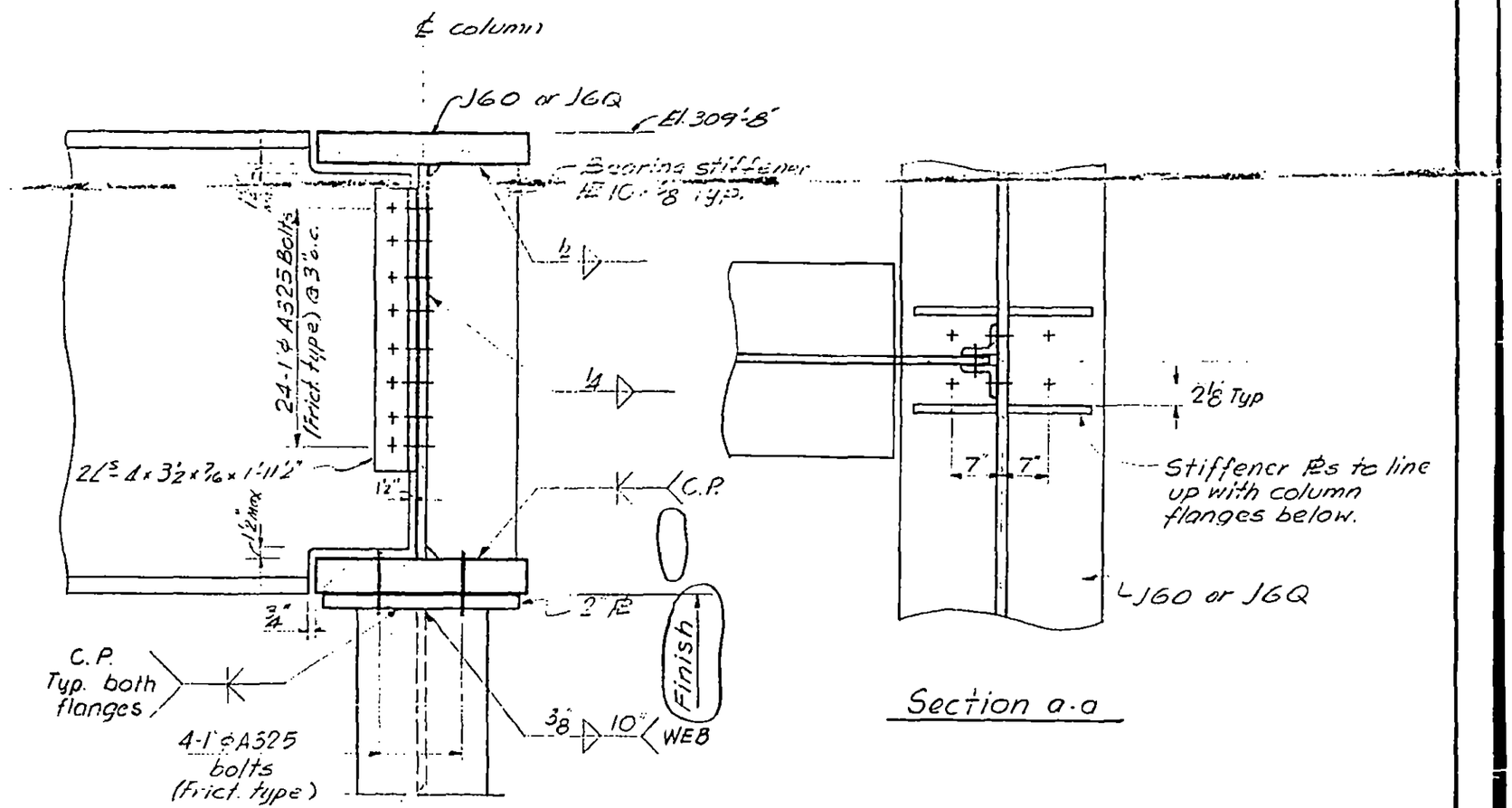

Section a-a

Note: Some stiffeners omitted from elevation for clarity. See Sect. a-a

LICENSED PROFESSIONAL ENGINEER LESLIE E. ROBERTSON No. 34360 UNIVERSITY OF THE STATE OF NEW YORK

12-JK2-150

SKILLING - HELLE - CHRISTIANSEN - ROBERTSON Structural & Civil Engineers

PROJECT THE WORLD TRADE CENTER | TITLE GIRDER CONNECTION DETAIL | DATE 5-1-68

REVISIONS

7-19-68

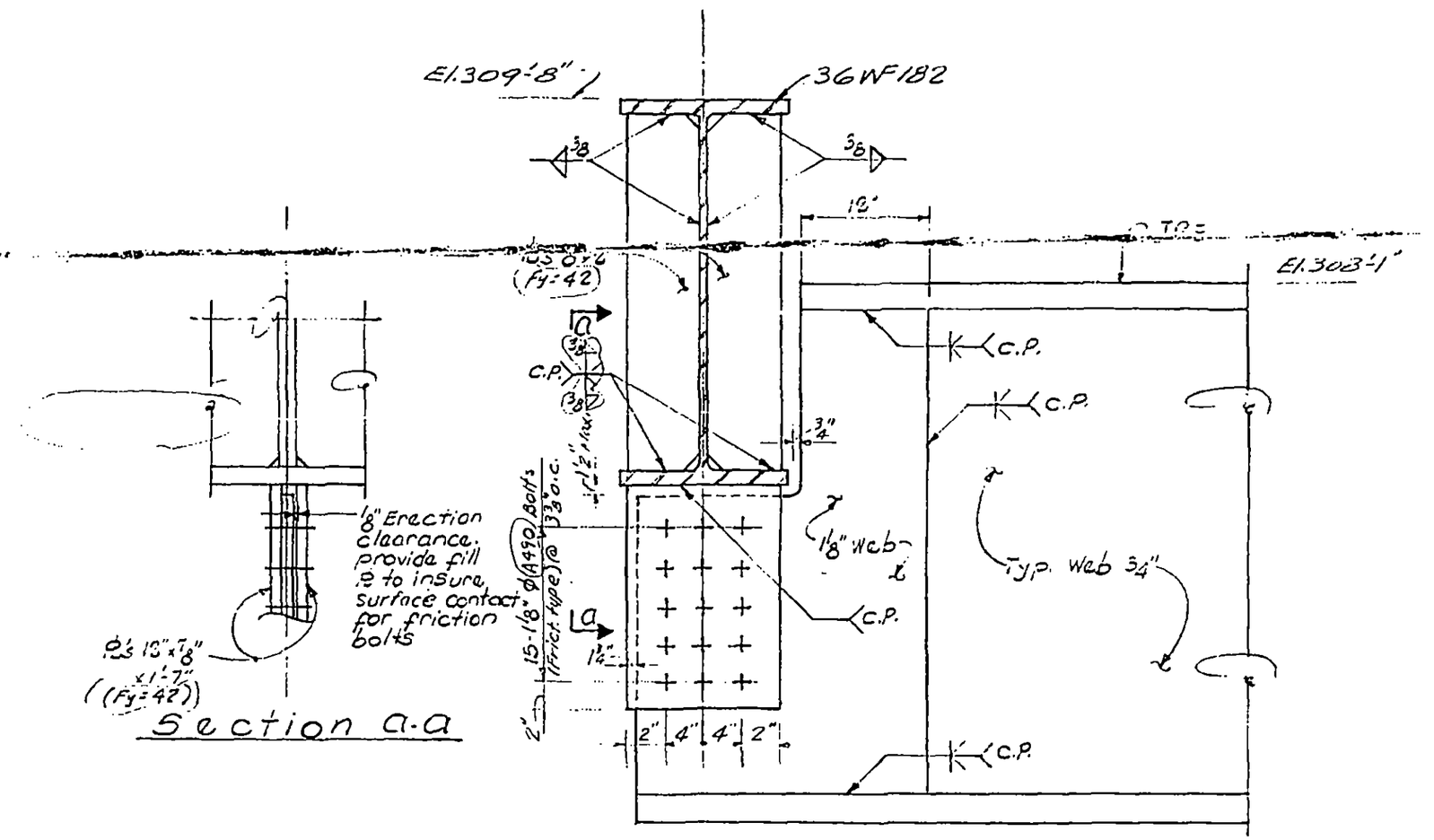

LICENSED PROFESSIONAL ENG'R
LESLIE E. ROBERTSON
No. 34360
UNIVERSITY OF THE STATE OF NY

12-JK2-131

SKILLING - HELLE - CHRISTIANSEN - ROBERTSON Structural & Civil Engineers

PROJECT THE WORLD TRADE CENTER | TITLE GIRDER CONNECTION DETAIL | DATE 5-1-68

REVISIONS

7-19-68

1-8-69

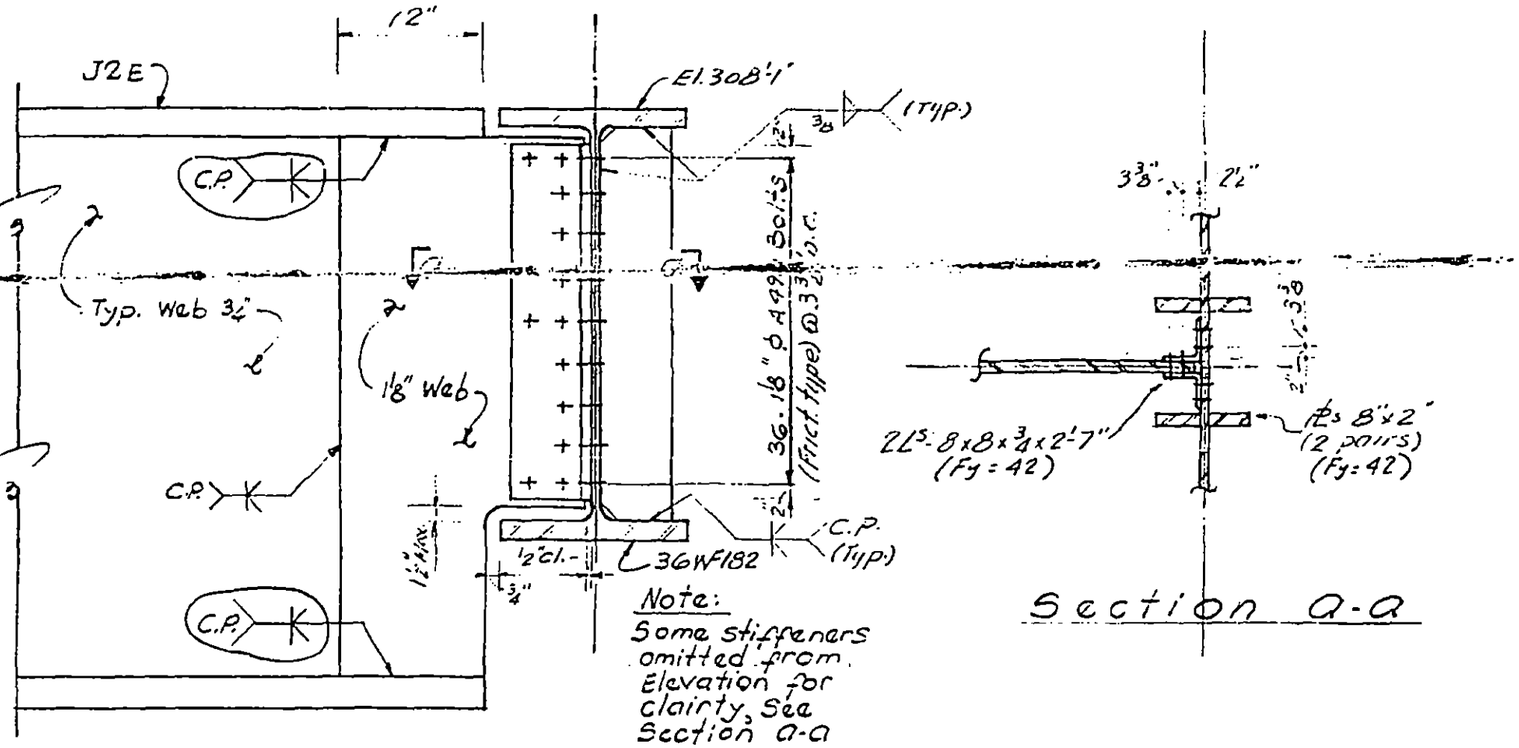

Section a-a

LICENSED PROFESSIONAL ENGINEER
LESLIE E. ROBERTSON
No. 34960
REGISTERED BY THE STATE OF NEW YORK

DRAWN
A.F.

REVIEWED
E.L.

12-JK2-132

SKILLING - HELLE - CHRISTIANSEN - ROBERTSON Structural & Civil Engineers

PROJECT THE WORLD TRADE CENTER | TITLE GIRDER CONNECTION DETAIL | DATE 5-1-68

REVISIONS

6-28-68

7-19-68

1-8-69

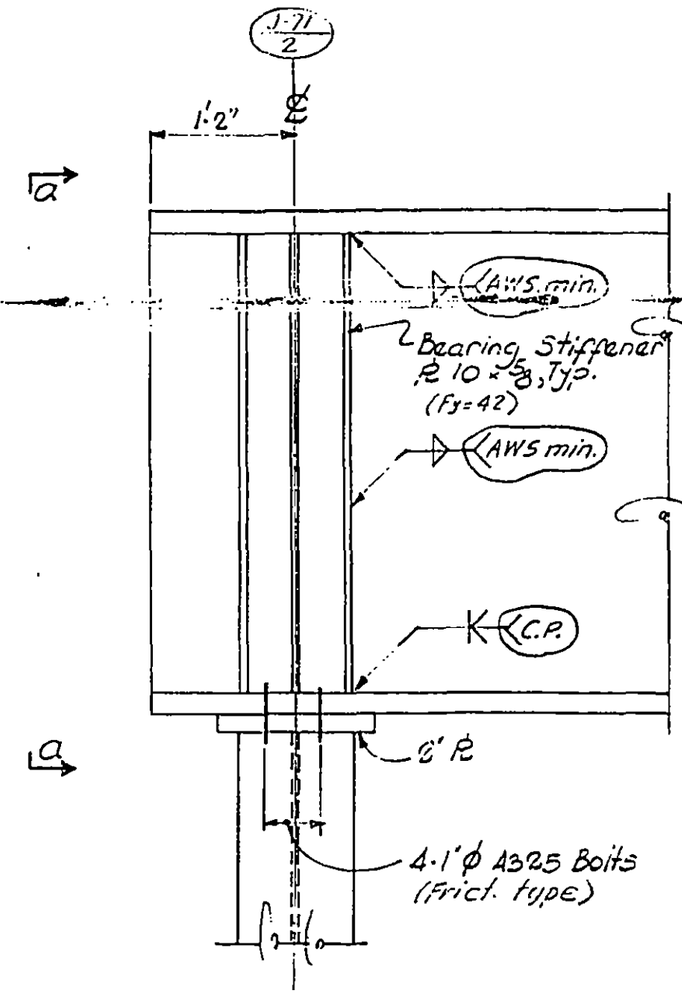

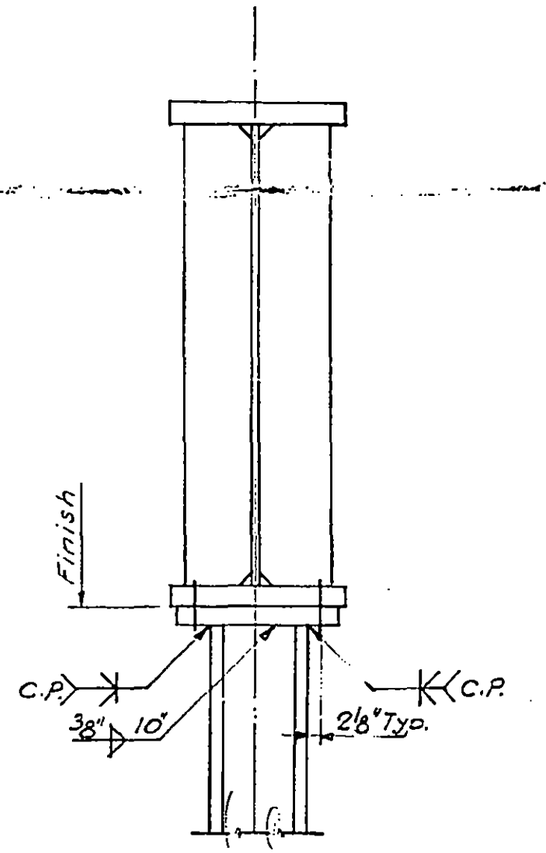

Section a-a

LICENSED PROFESSIONAL ENGINEER LESLIE E. ROBERTSON No. 34360 UNIVERSITY OF THE STATE OF NEW YORK

DRAWN A.F.

REVIEWED E.L.

12-JK2-133

SKILLING - HELLE - CHRISTIANSEN - ROBERTSON Structural & Civil Engineers

PROJECT THE WORLD TRADE CENTER | TITLE GIRDER CONNECTION DETAIL | DATE 5-1-68

REVISIONS

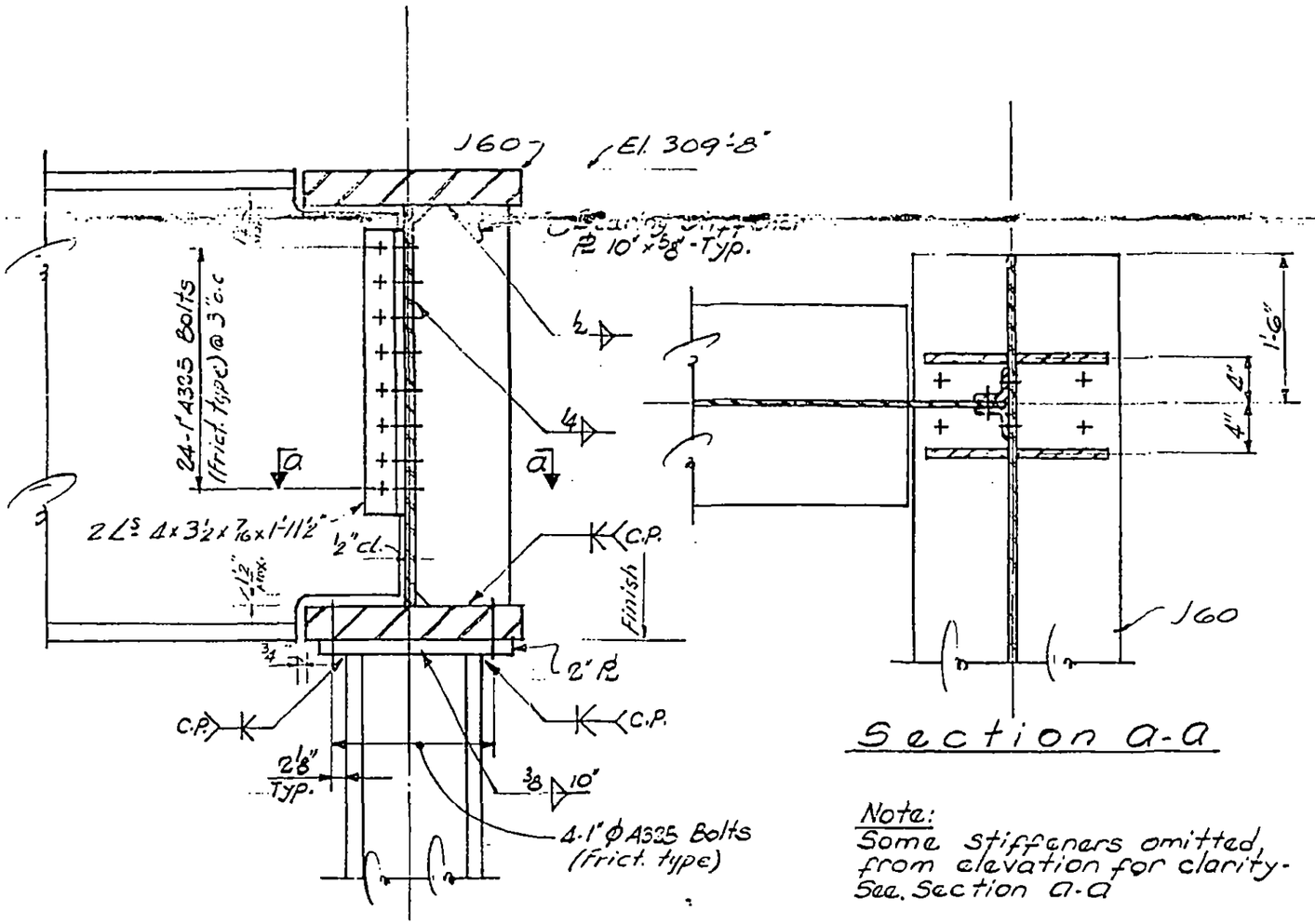

Section a-a

Note:
Some stiffeners omitted from elevation for clarity. See Section a-a

LICENSED PROFESSIONAL ENGINEER
LESLIE E. ROBERTSON
No. 34360
UNIVERSITY OF THE STATE OF NEW YORK

12-JK2-134

SKILLING - HELLE - CHRISTIANSEN - ROBERTSON Structural & Civil Enginoors

PROJECT THE WORLD TRADE CENTER | TITLE GIRDER CONNECTION DETAIL | DATE 5-1-68

REVISIONS

6-7-68

7-19-68

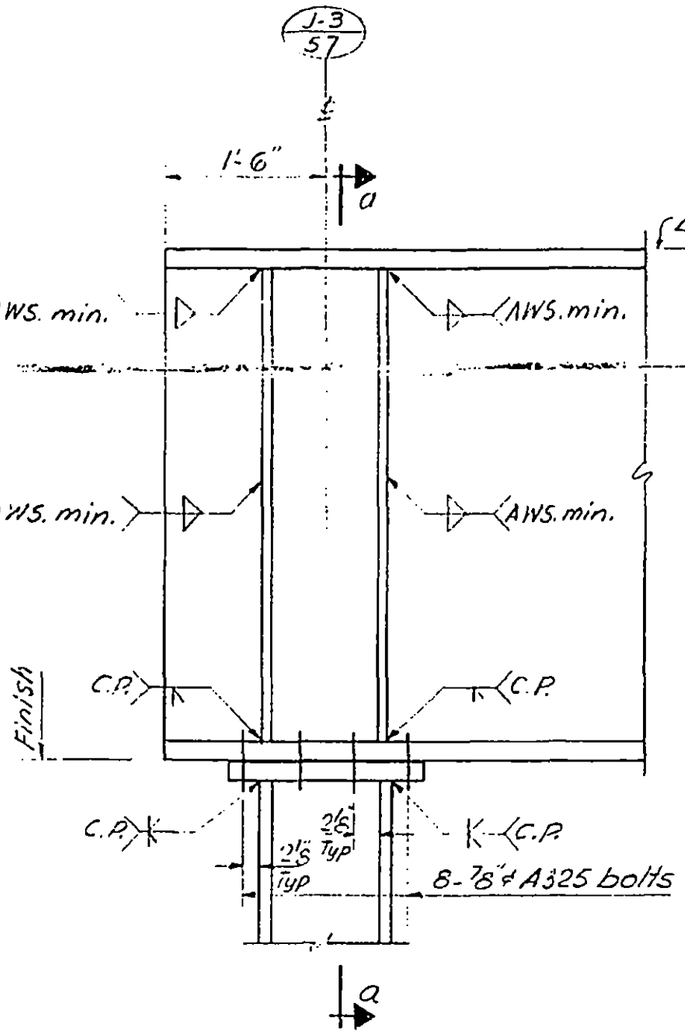

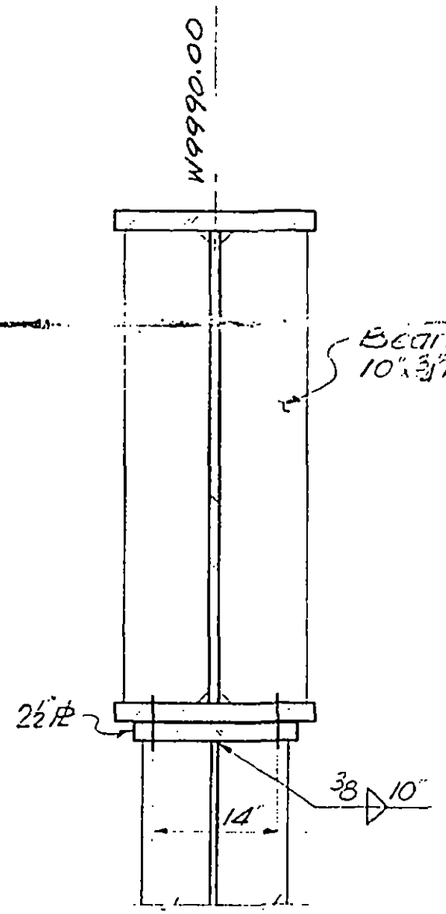

Section a-a

LICENSED PROFESSIONAL ENGINEER
LESLIE E. ROBERTSON
No. 34360
STATE OF NEW YORK

12 - JK 2 - 135

SKILLING - HELLE - CHRISTIANSEN - ROBERTSON Structural & Civil Engineers

PROJECT THE WORLD TRADE CENTER | TITLE GIRDER J2H CONNECTION DETAILS | DATE 6-7-68

REVISIONS

7-19-68

1-8-69

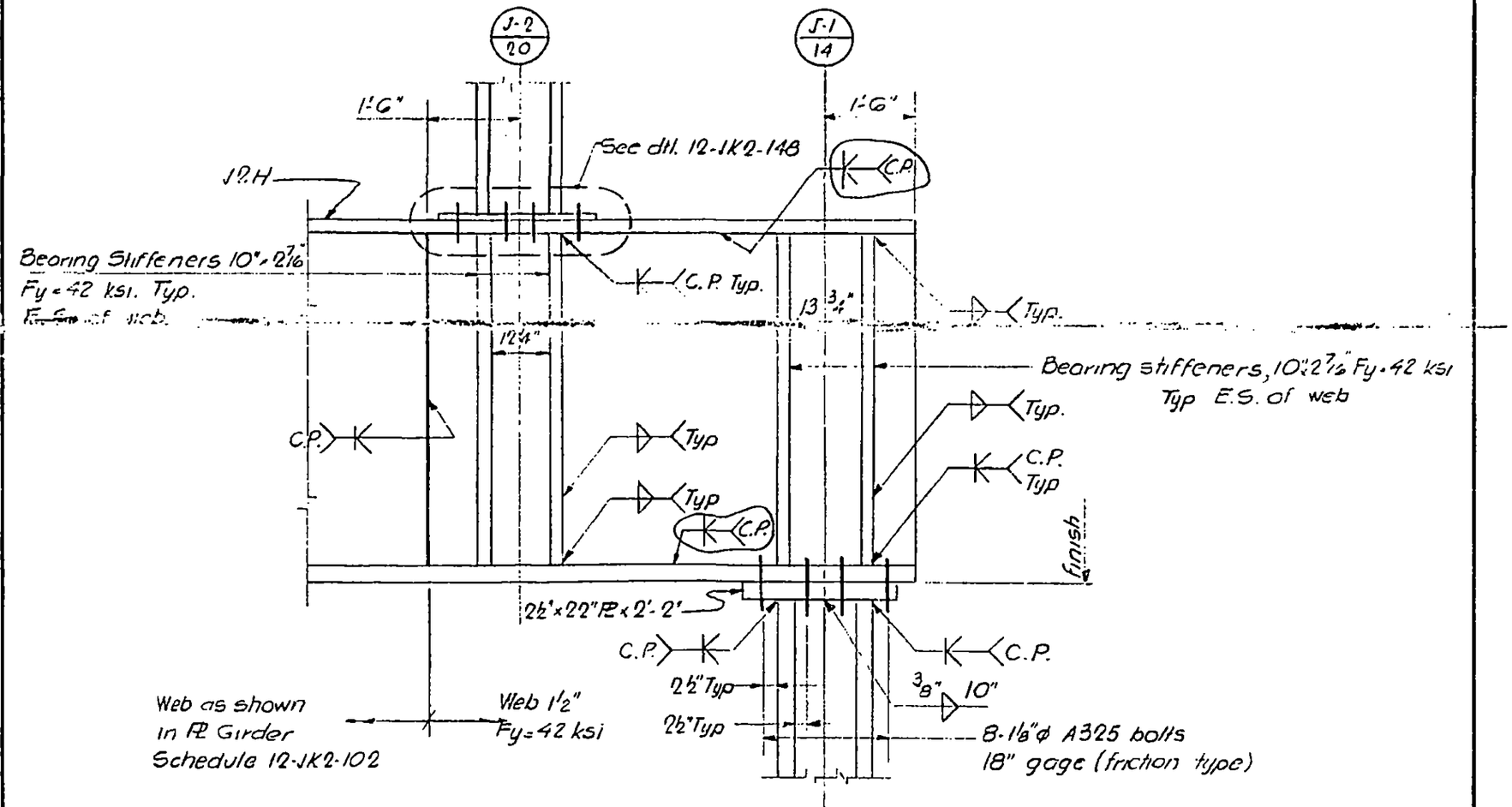

Welds are AISC minimum
unless otherwise shown

LICENSED PROFESSIONAL ENGINEER
LESLIE E. ROBERTSON
No. 34360
UNIVERSITY OF THE STATE OF NEW YORK

DRAWN A.F.

REVIEWED E.L.

12-JK2-136

SKILLING - HELLE - CHRISTIANSEN - ROBERTSON Structural & Civil Engineers

PROJECT THE WORLD TRADE CENTER | TITLE GIRDER J2I CONNECTION DETAIL | DATE 6-7-68

REVISIONS

1-19-68

1-8-69

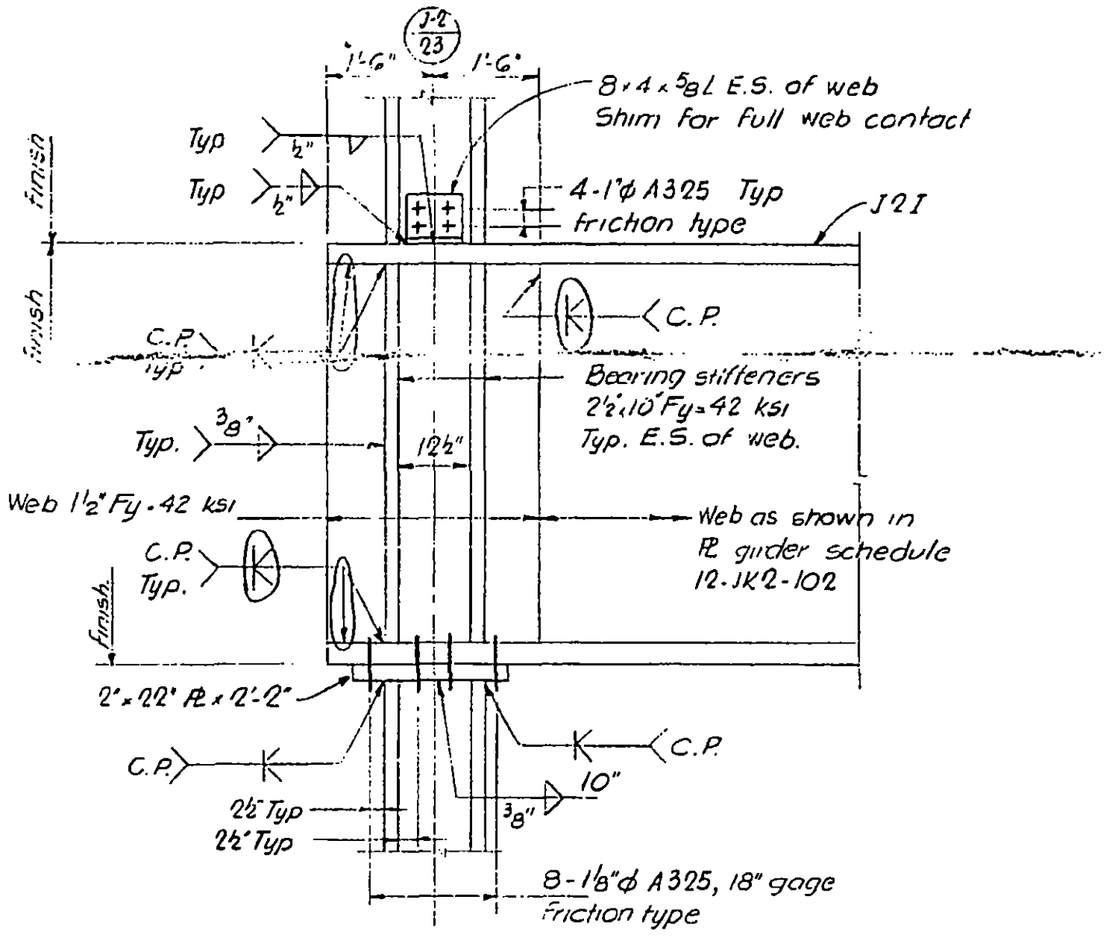

Ref. dwgs · 12-JK2-102, SJ-75

LICENSED PROFESSIONAL ENGINEER
LESLIE E. ROBERTSON
No. 34360
UNIVERSITY OF THE STATE OF NEW YORK

DRAWN
A.F.

REVIEWED
E.L.

12-JK2-137

SKILLING - HELLE - CHRISTIANSEN - ROBERTSON Structural & Civil Engineers

PROJECT THE WORLD TRADE CENTER | TITLE GIRDER J4N CONNECTION DETAIL | DATE 6-7-68

REVISIONS
7-19-68
9-4-68
1-8-69

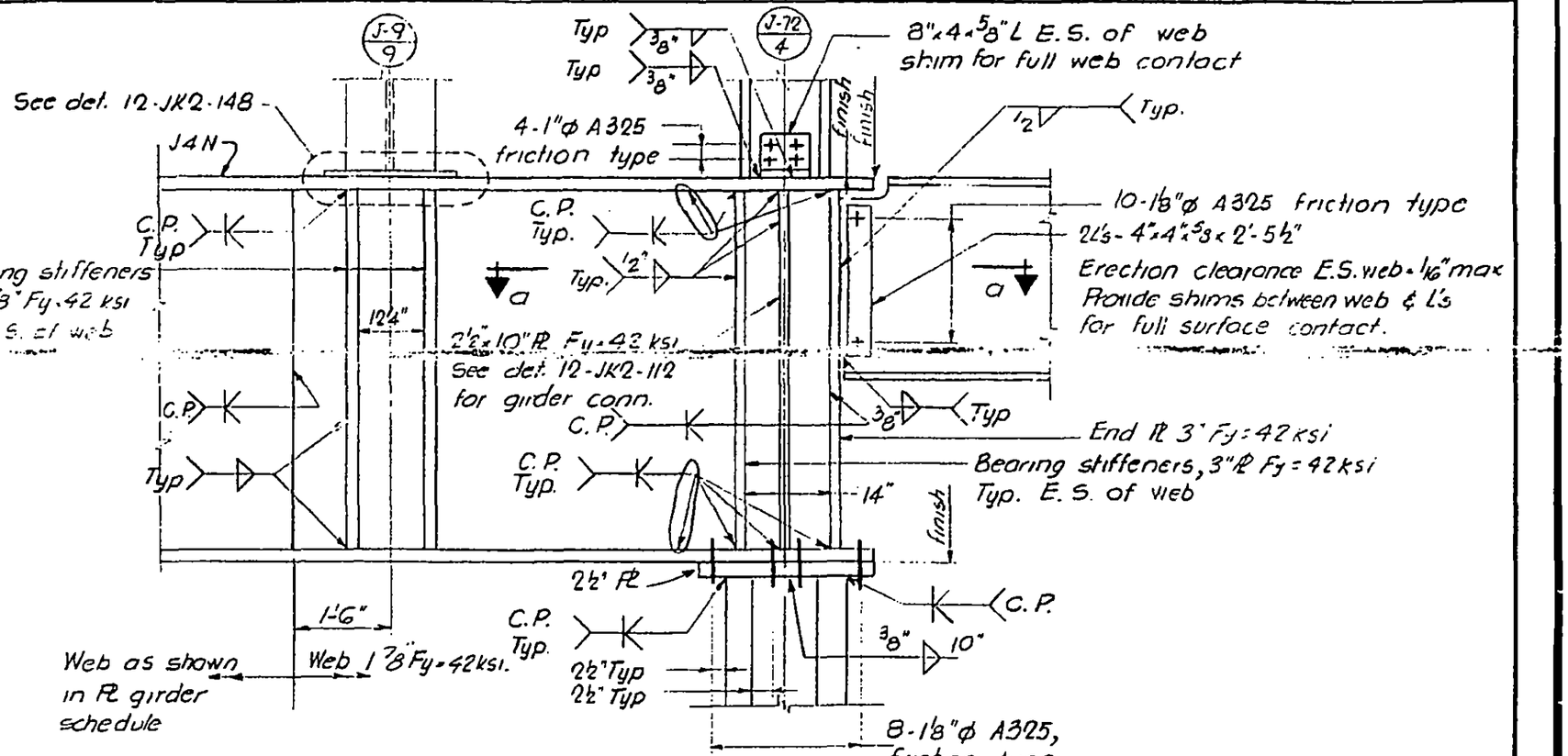

Elevation - Section b-b

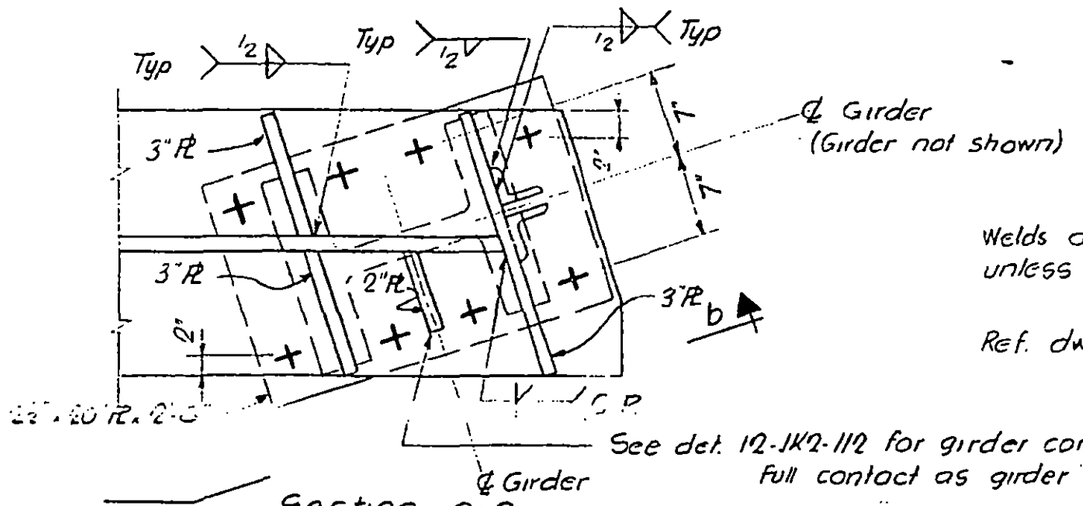

Section a-a

Welds are AISC minimum unless otherwise shown

Ref. dwgs: 12-JK2-102, SJ-76

LICENSED PROFESSIONAL ENGINEER LESLIE E. ROBERTSON No. 34360 STATE OF NEW YORK UNIVERSITY OF THE STATE OF NEW YORK

DRAWN A.F.
REVIEWED E.L.

12-JK2-138

SKILLING - HELLE - CHRISTIANSEN - ROBERTSON Structural & Civil Engineers

PROJECT THE WORLD TRADE CENTER | TITLE GIRDER CONNECTION DETAIL | DATE 6-7-68

REVISIONS

6-28-68

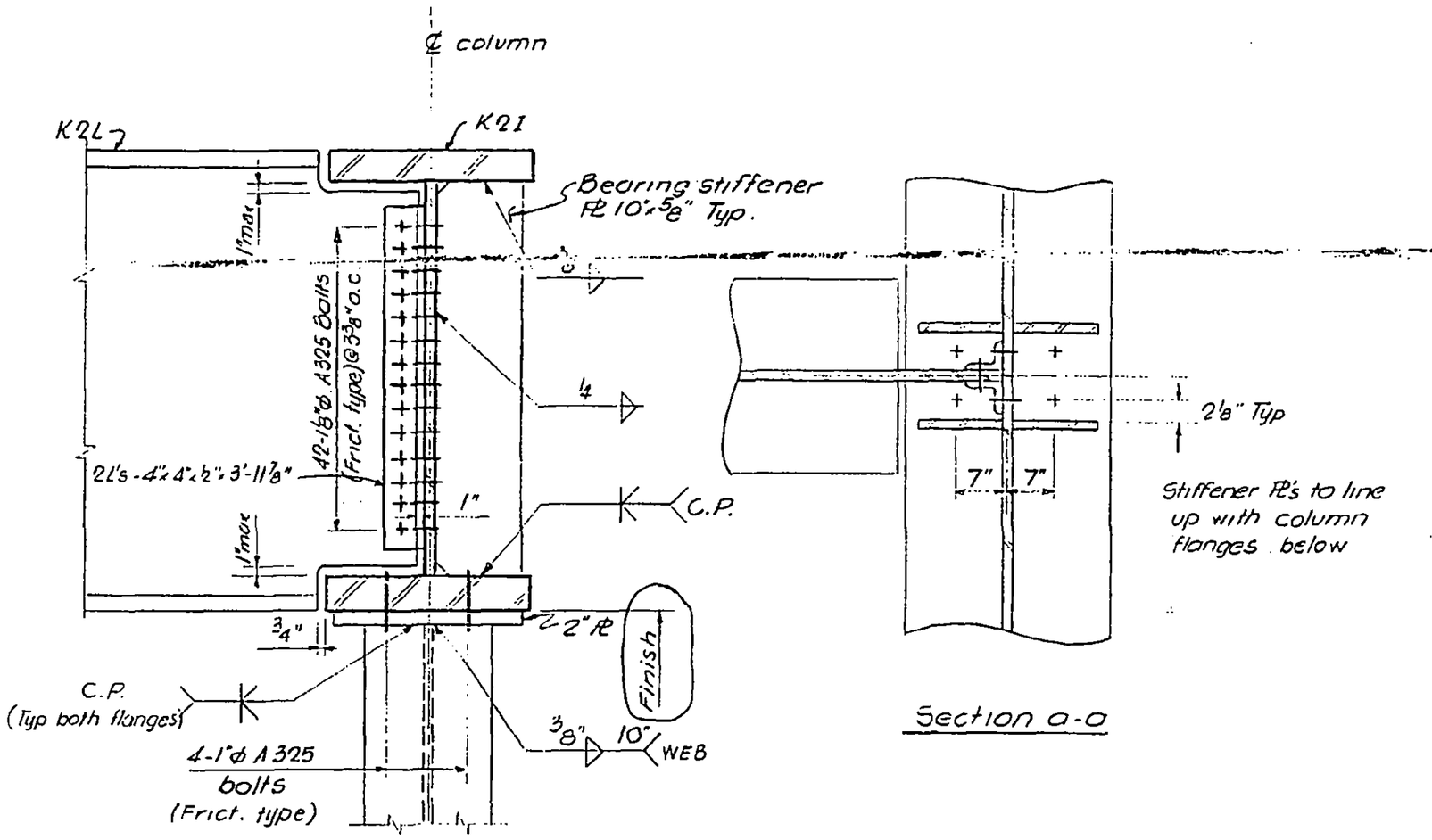

Section a-a

Note: Some stiffeners omitted from elevation From clarity. See Sect. a-a

LICENSED PROFESSIONAL ENGINEER
LESLIE E. ROBERTSON
No. 34360
OF THE STATE OF NEW YORK

12-JK2-139

SKILLING - HELLE - CHRISTIANSEN - ROBERTSON Structural & Civil Engineers

PROJECT THE WORLD TRADE CENTER | TITLE GIRDER CONNECTION DETAIL | DATE 6-7-68

REVISIONS

6-28-68

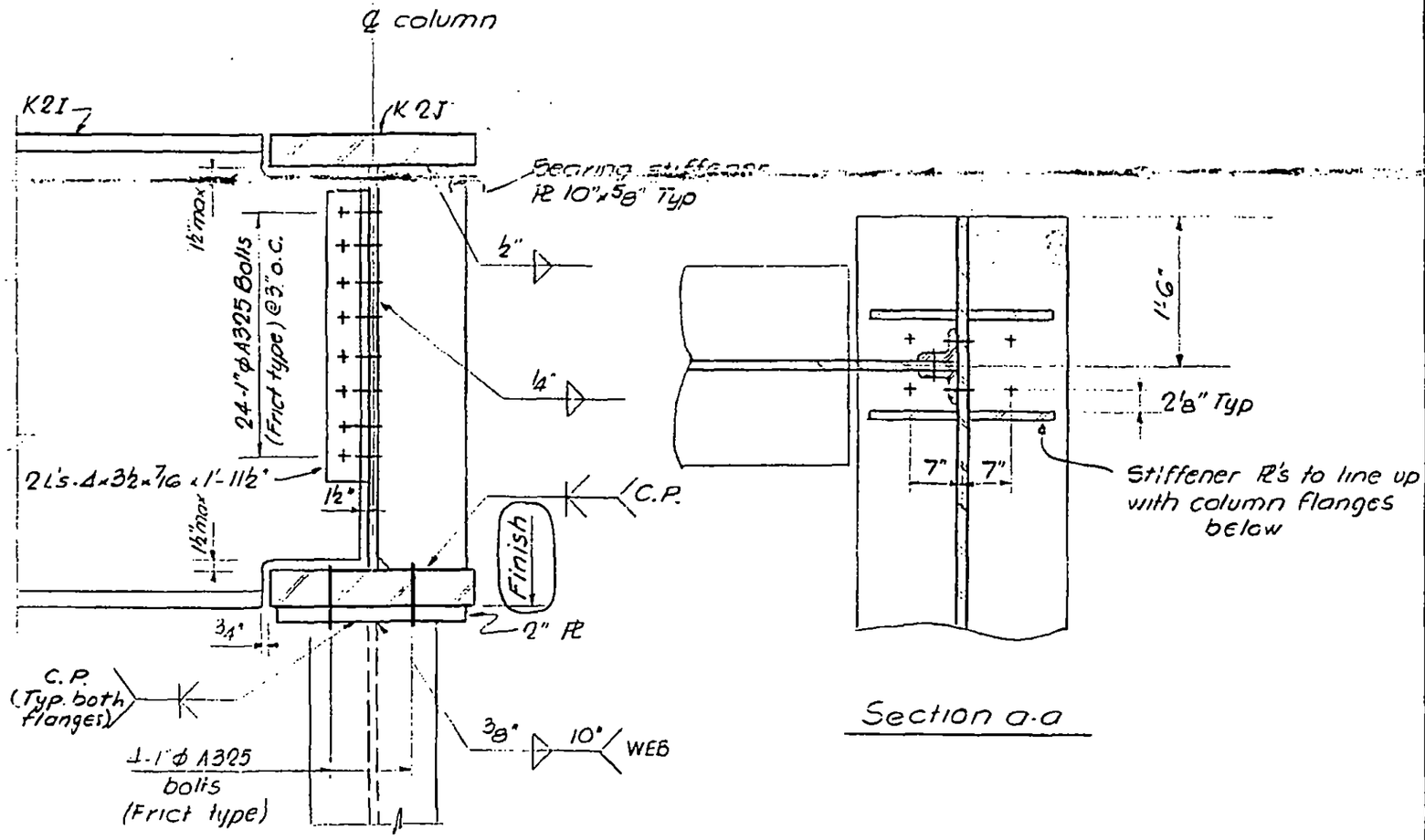

Section a-a

Note: Some stiffeners omitted from elevation for clarity. See Sect. a-a.

LICENSED PROFESSIONAL ENGINEER LESLIE E. ROBERTSON No. 34360 UNIVERSITY OF THE STATE OF NEW YORK

12-JK2-140

SKILLING - HELLE - CHRISTIANSEN - ROBERTSON Structural & Civil Engineers

PROJECT THE WORLD TRADE CENTER | TITLE GIRDER CONNECTION DETAIL | DATE 6-7-68

REVISIONS

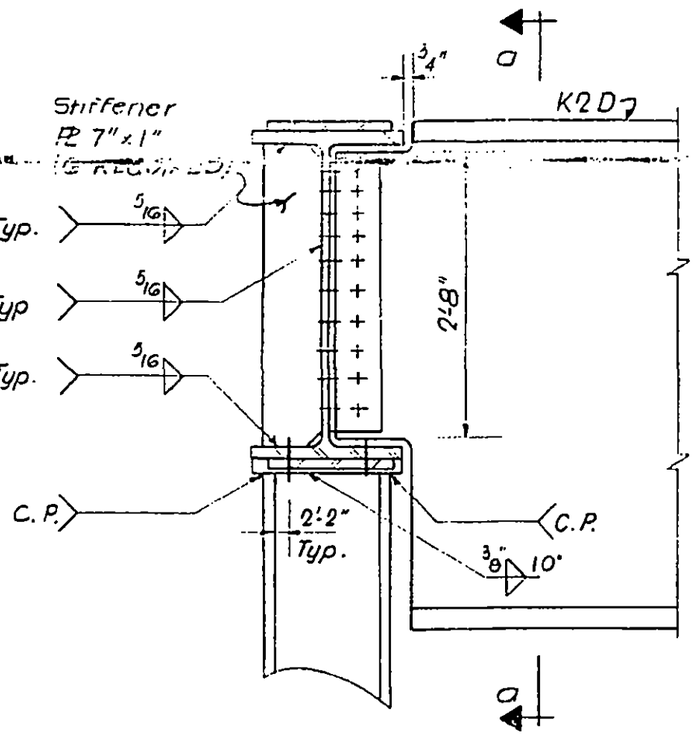

Elevation

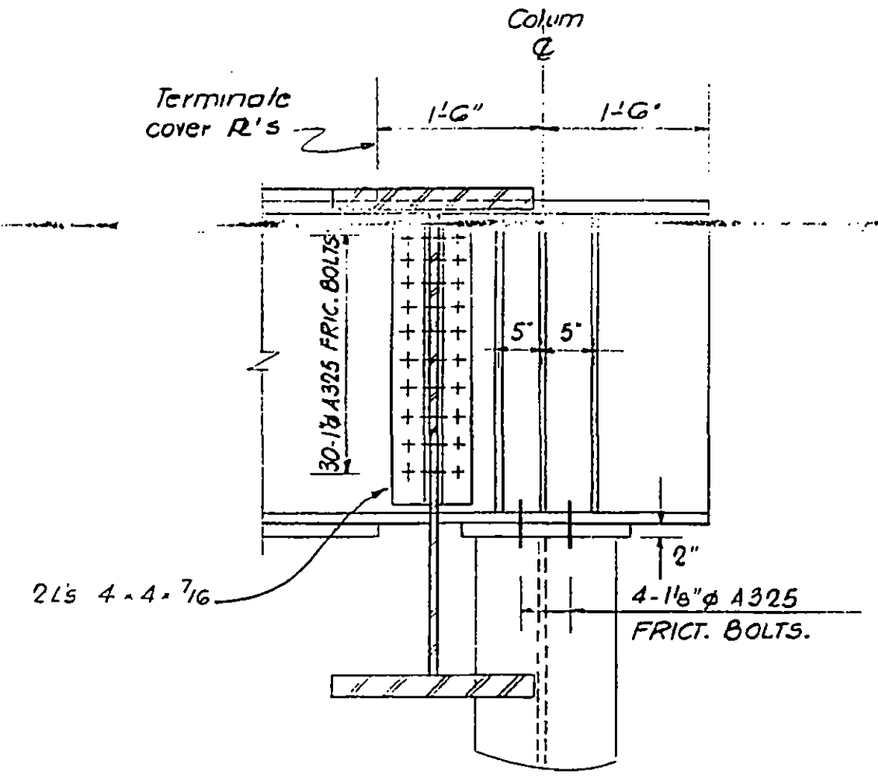

Section a-a

Note : Some stiffeners omitted from elevation for clarity

LICENSED PROFESSIONAL ENGINEER
LESLIE E. ROBERTSON
No. 34360
UNIVERSITY OF THE STATE OF NEW YORK

12-JK2-141

SKILLING - HELLE - CHRISTIANSEN - ROBERTSON Structural & Civil Engineers

PROJECT THE WORLD TRADE CENTER | TITLE PLATE GIRDER J4-0 DETAILS | DATE 6-7-68

REVISIONS
7-19-68
1-8-69

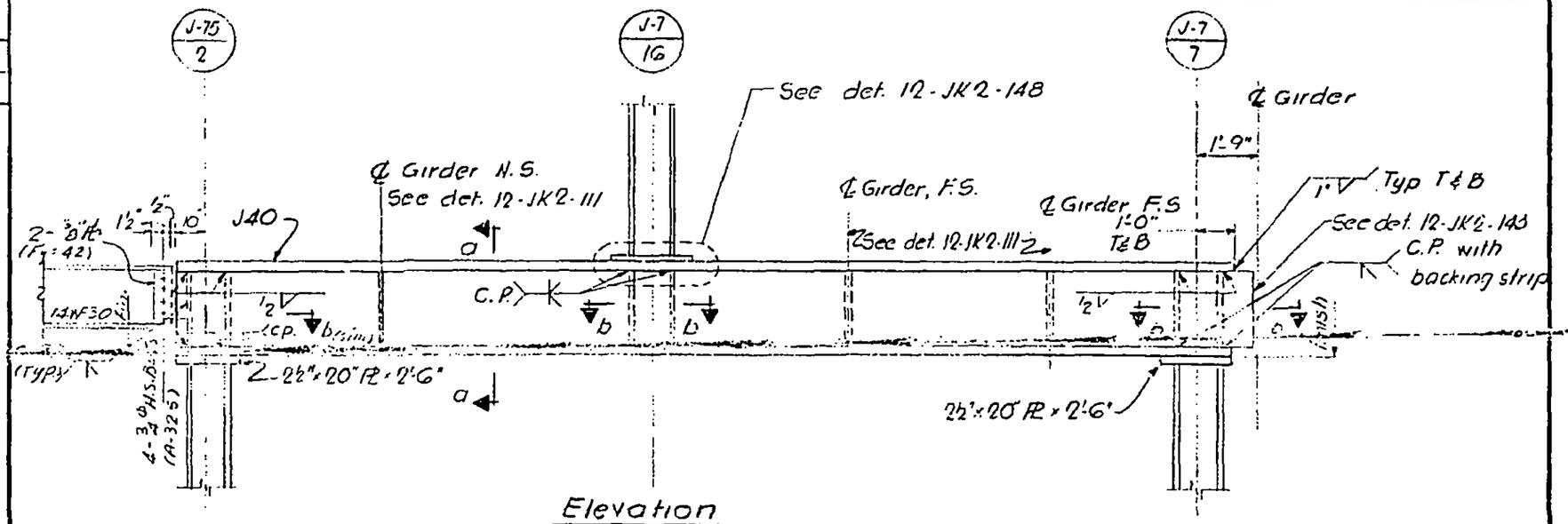

LICENSED PROFESSIONAL ENGINEER
LESLIE E. ROBERTSON
No. 34360
UNIVERSITY OF THE STATE OF NEW YORK

A.F.
REVIEWED
E.L.

Ref. dwgs. SJ-76

12-JK2-142

SKILLING - HELLE - CHRISTIANSEN - ROBERTSON Structural & Civil Engineers

PROJECT THE WORLD TRADE CENTER | TITLE GIRDER J4-0 CONNECTION DETAIL | DATE 6-7-68

REVISIONS

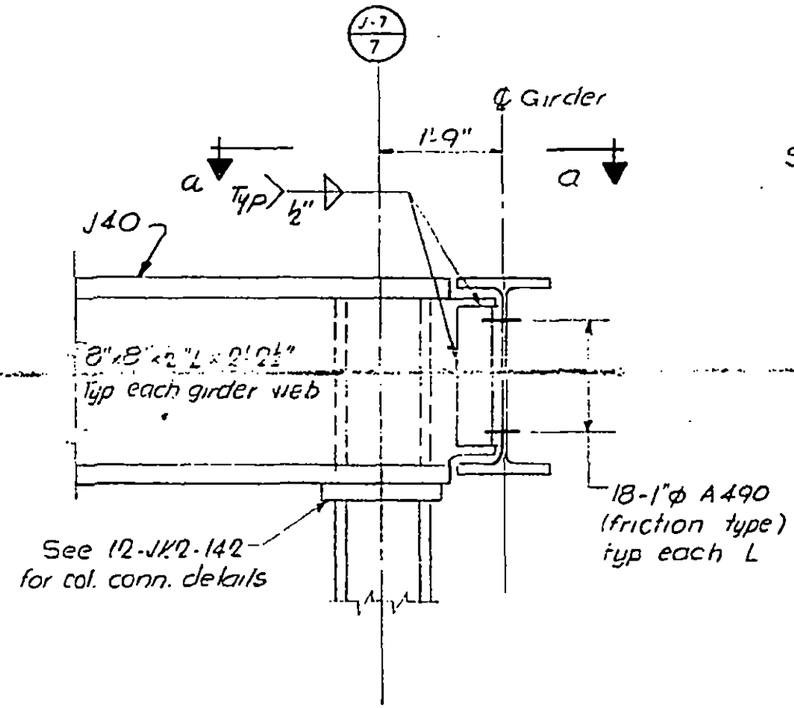

Elevation Section

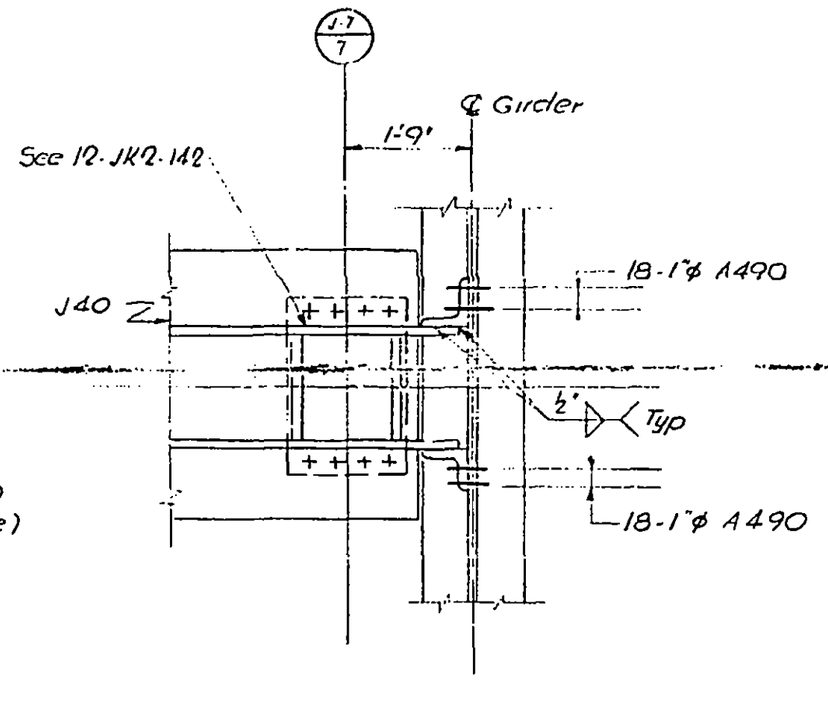

Plan - Section a-a

LICENSED PROFESSIONAL ENGINEER
LESLIE E. ROBERTSON
No. 34360
UNIVERSITY OF THE STATE OF NEW YORK

Ref. dwgs: 12-JK2-142, SJ-76

12-JK2-143

SKILLING - HELLE - CHRISTIANSEN - ROBERTSON Structural & Civil Engineers

PROJECT THE WORLD TRADE CENTER | TITLE BEAM CONNECTION DETAIL | DATE 6-7-68

REVISIONS

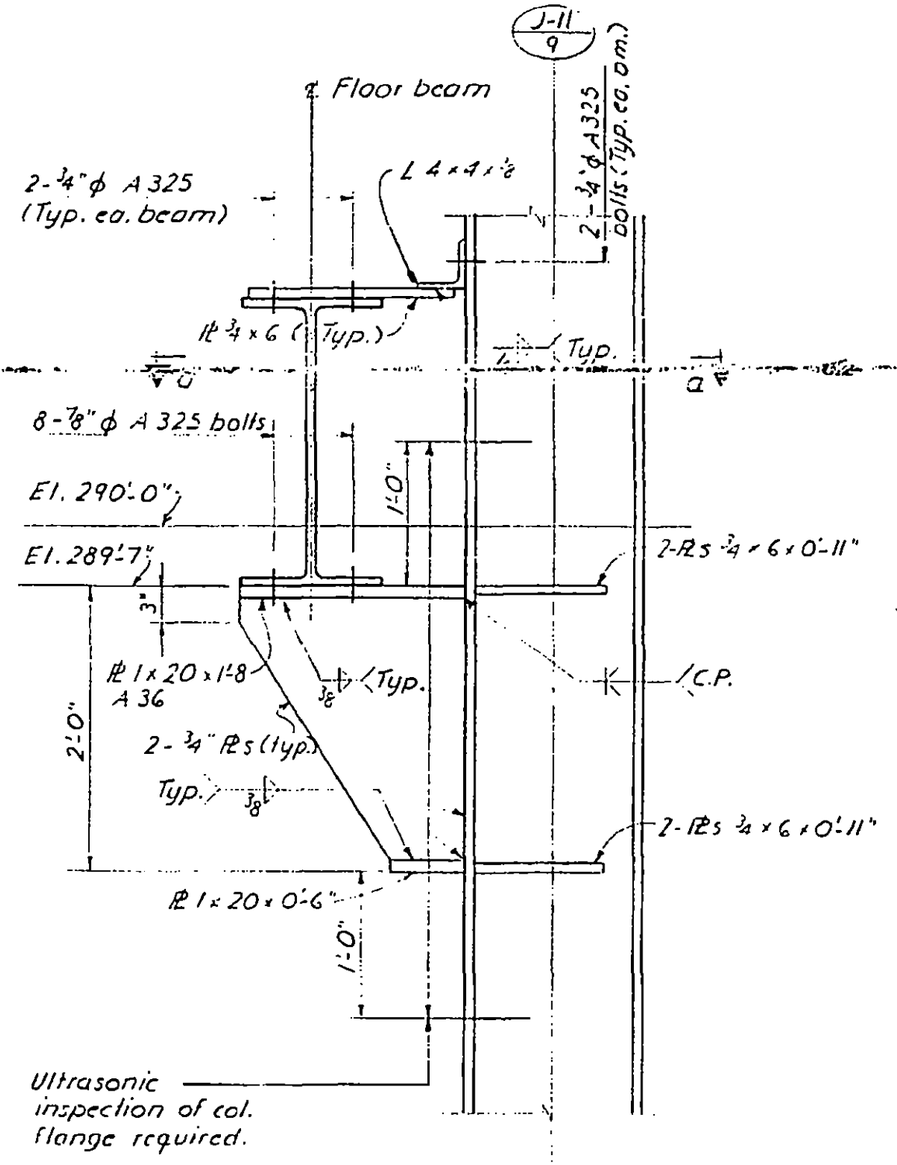

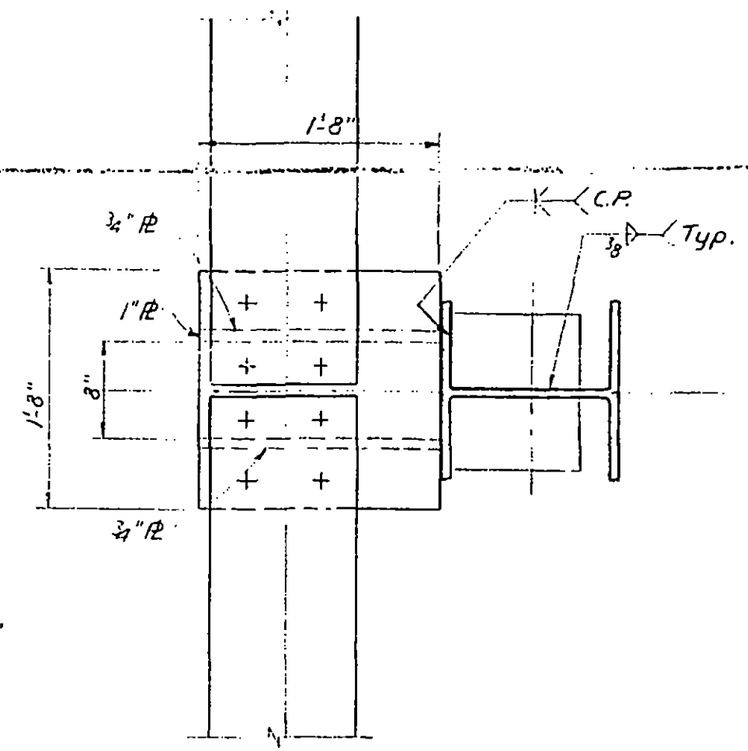

Section a-a

LICENSED PROFESSIONAL ENGINEER
LESLIE E. ROBERTSON
No. 34360
UNIVERSITY OF THE STATE OF NEW YORK

12-JK2-144

SKILLING, HELLE, CHRISTIANSEN, ROBERTSON — Structural & Civil Engineers

PROJECT THE WORLD TRADE CENTER | TITLE GIRDER CONNECTION DETAIL | DATE 9-4-68

REVISIONS

1-8-69

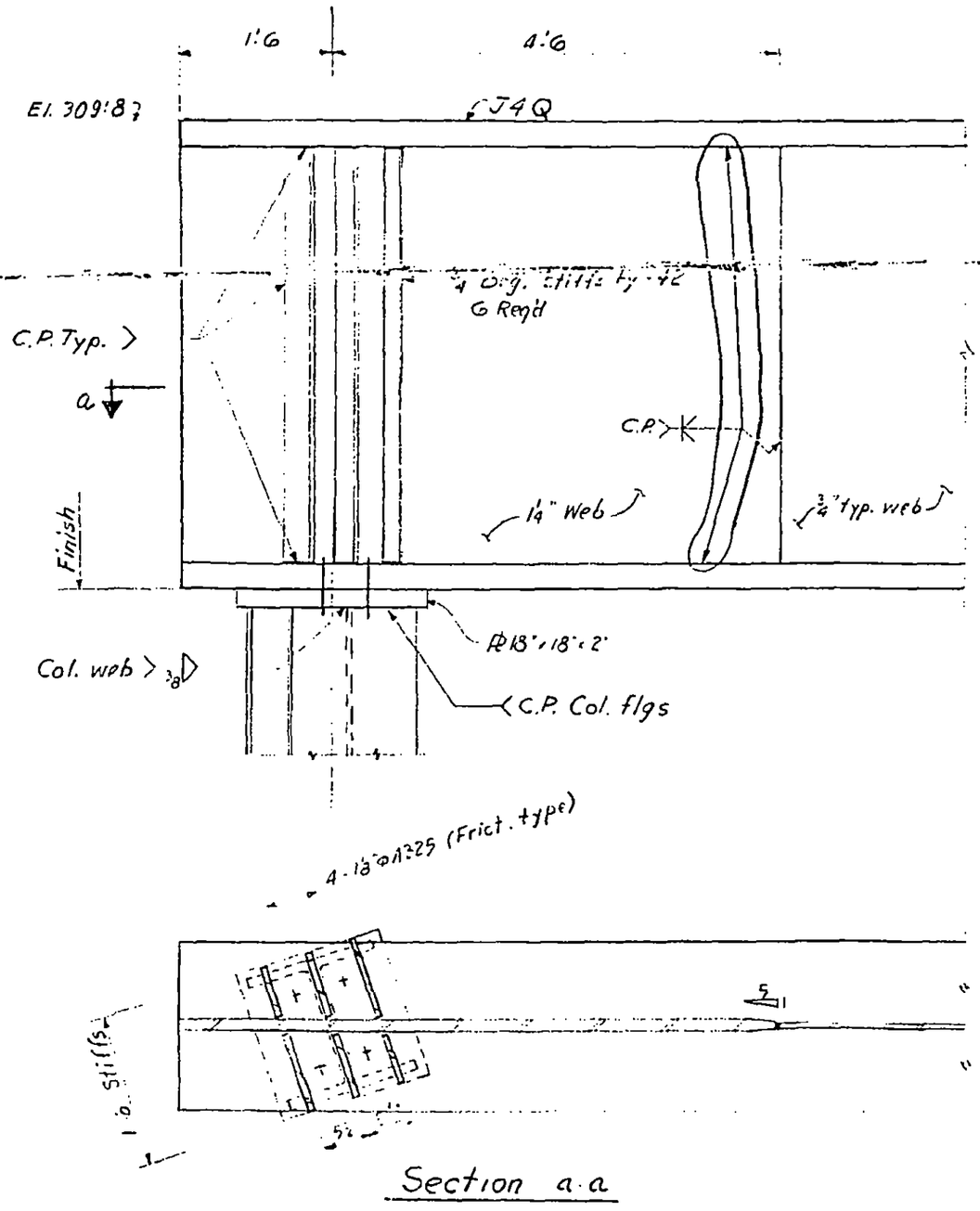

Section a-a

LICENSED PROFESSIONAL ENGINEER
LESLIE E. ROBERTSON
No. 34360
UNIVERSITY OF THE STATE OF NEW YORK

DESIGNED

DRAWN A.F.

REVIEWED E.L.

12-JK2-145

SKILLING, HELLE, CHRISTIANSEN, ROBERTSON — Structural & Civil Engineers

PROJECT: THE WORLD TRADE CENTER | TITLE: DETAIL OF PLATE GIRDER | DATE: 9-1-68

REVISIONS
1-8-69

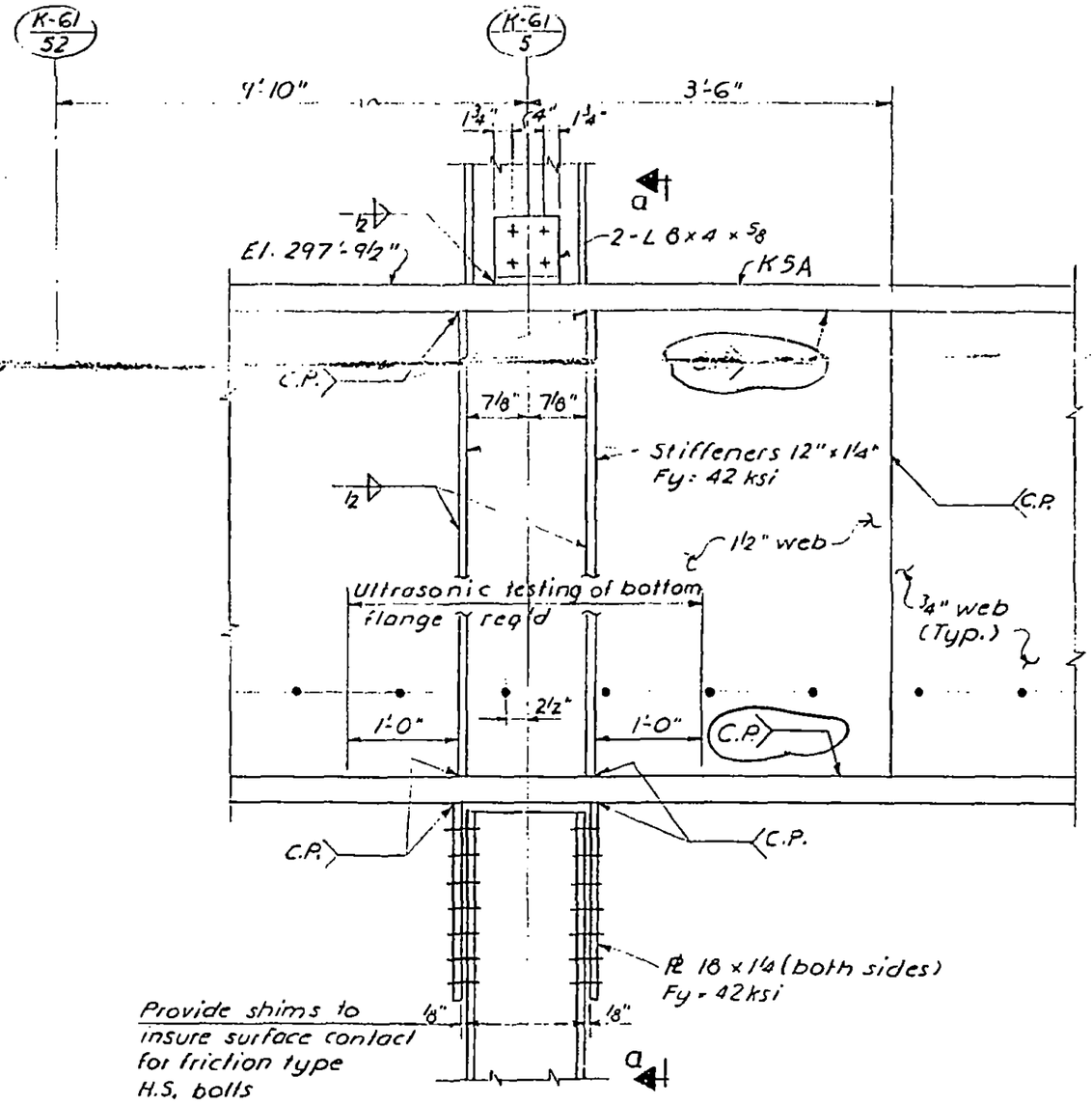

Elevation

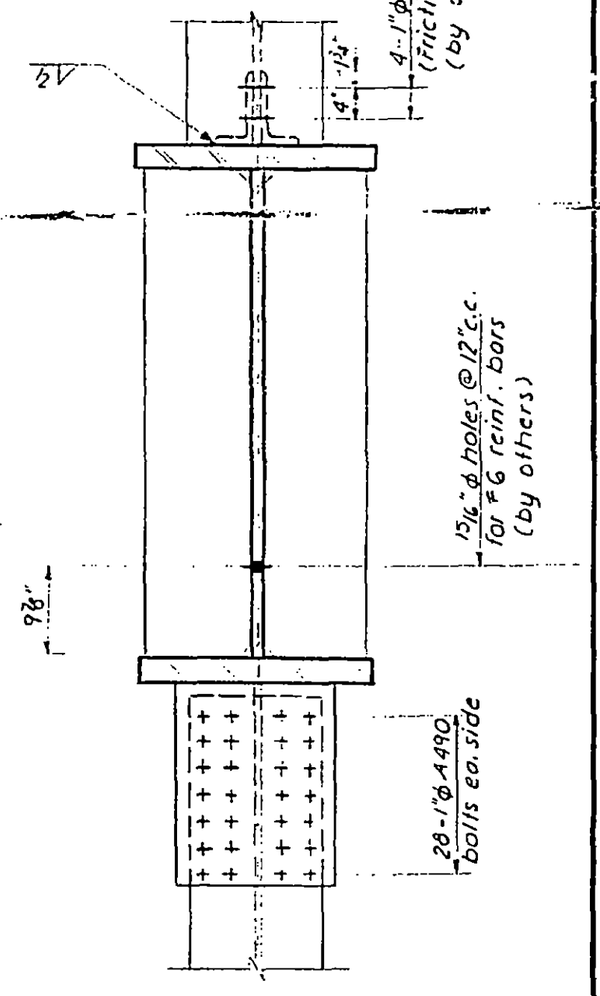

Section a-a

LICENSED PROFESSIONAL ENGINEER
LESLIE E. ROBERTSON
No. 34360
UNIVERSITY OF THE STATE OF NEW YORK

DESIGNED

DRAWN A.F.

REVIEWED E.L.

12-JK2-146

SKILLING, HELLE, CHRISTIANSEN, ROBERTSON — Structural & Civil Engineers

PROJECT THE WORLD TRADE CENTER | TITLE DETAIL OF PLATE GIRDER | DATE 9-4-68

REVISIONS

10-15-68

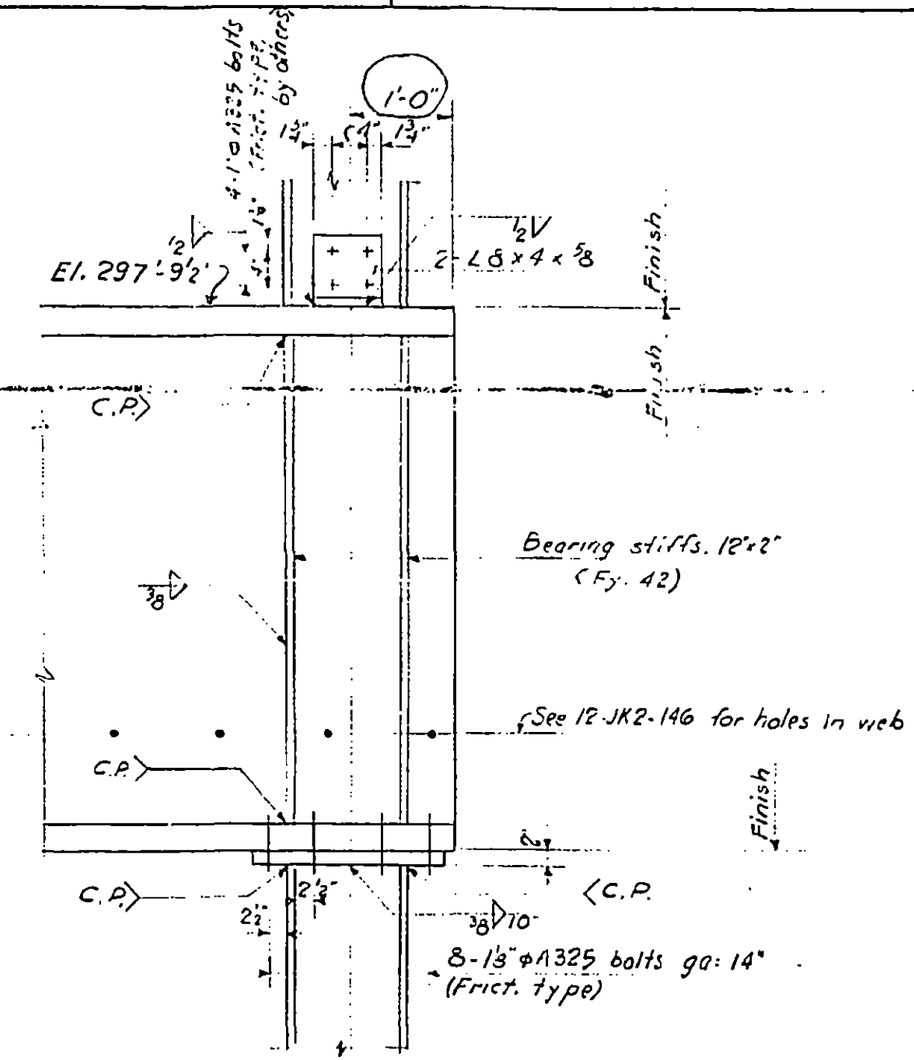

LICENSED PROFESSIONAL ENGINEER
LESLIE E. ROBERTSON
No. 34360
UNIVERSITY OF THE STATE OF NEW YORK

DESIGNED

DRAWN

REVIEWED

12-JK2-147

SKILLING - HELLE - CHRISTIANSEN - ROBERTSON Structural & Civil Engineers

PROJECT THE WORLD TRADE CENTER | TITLE COLUMN CONNECTION DETAIL | DATE 5-1-68

REVISIONS

9-4-68

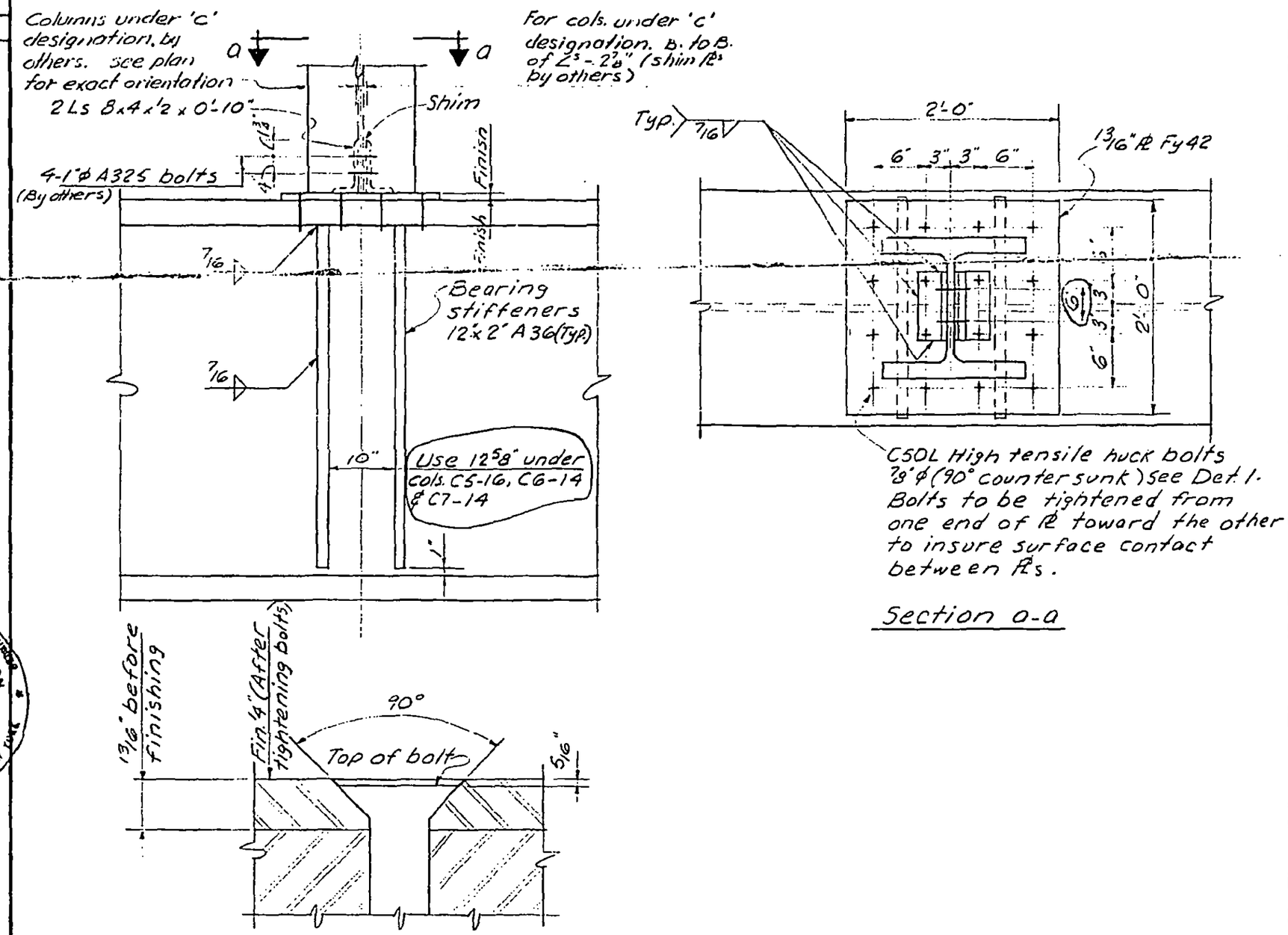

LICENSED PROFESSIONAL ENGINEER LESLIE E. ROBERTSON No. 34360 UNIVERSITY STATE OF NEW YORK

12-JK2-148

SKILLING, HELLE, CHRISTIANSEN, ROBERTSON — Structural & Civil Engineers

PROJECT: THE WORLD TRADE CENTER | TITLE: GIRDER CONNECTION DETAILS | DATE: 10-15-68

REVISIONS

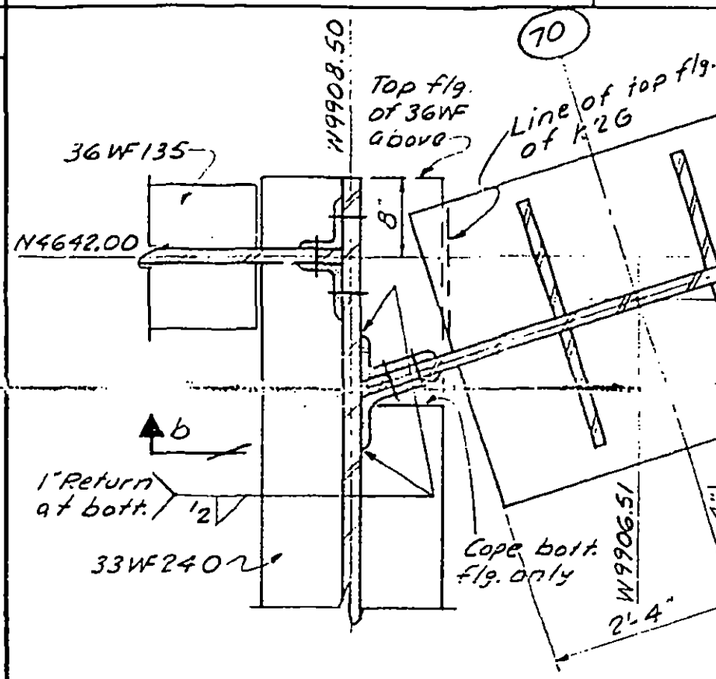

Section a-a

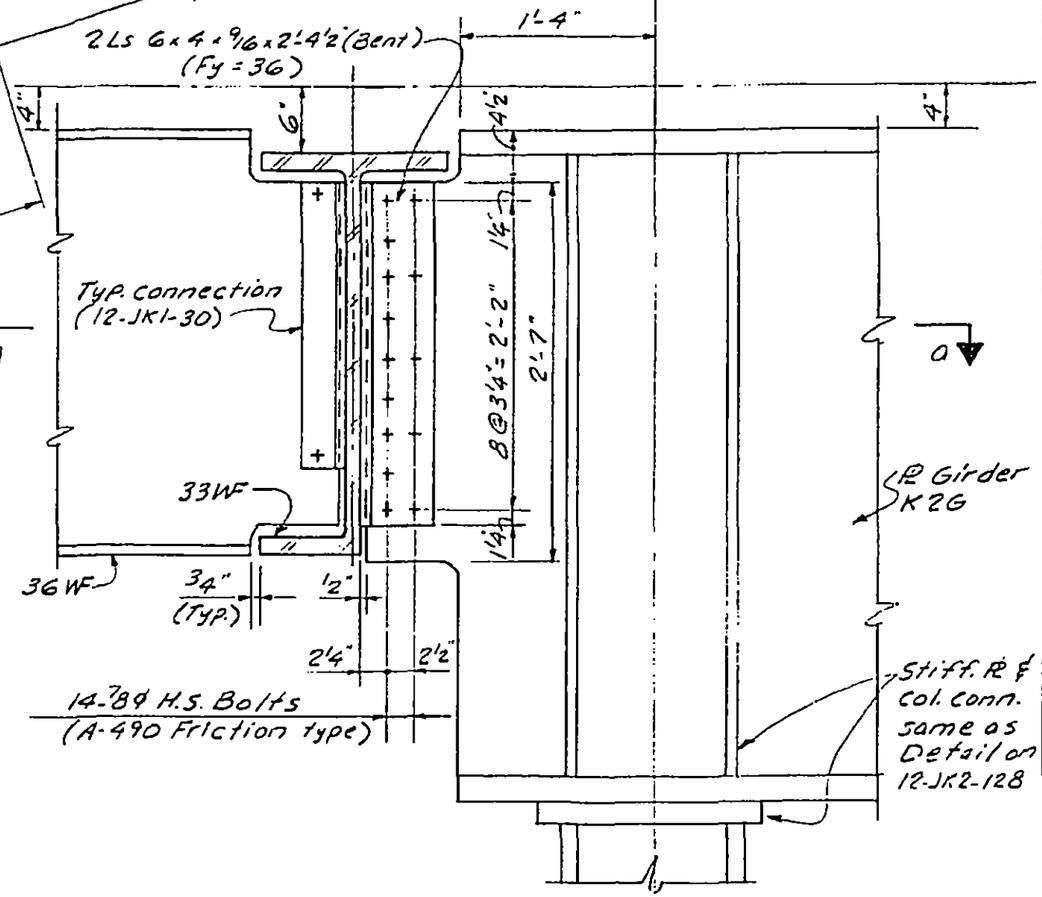

Section b-b

LICENSED PROFESSIONAL ENGINEER — LESLIE E. ROBERTSON — No. 34360 — UNIVERSITY OF THE STATE OF NEW YORK

DESIGNED

DRAWN

REVIEWED

12-JK2-149

SKILLING - HELLE - CHRISTIANSEN - ROBERTSON Structural & Civil Enginoors

PROJECT THE WORLD TRADE CENTER | TITLE NORTH PROJECTION EXHAUST HOUSING DETAILS | DATE 4-5-68

REVISIONS
5-1-68
6-6-69
5-12-71

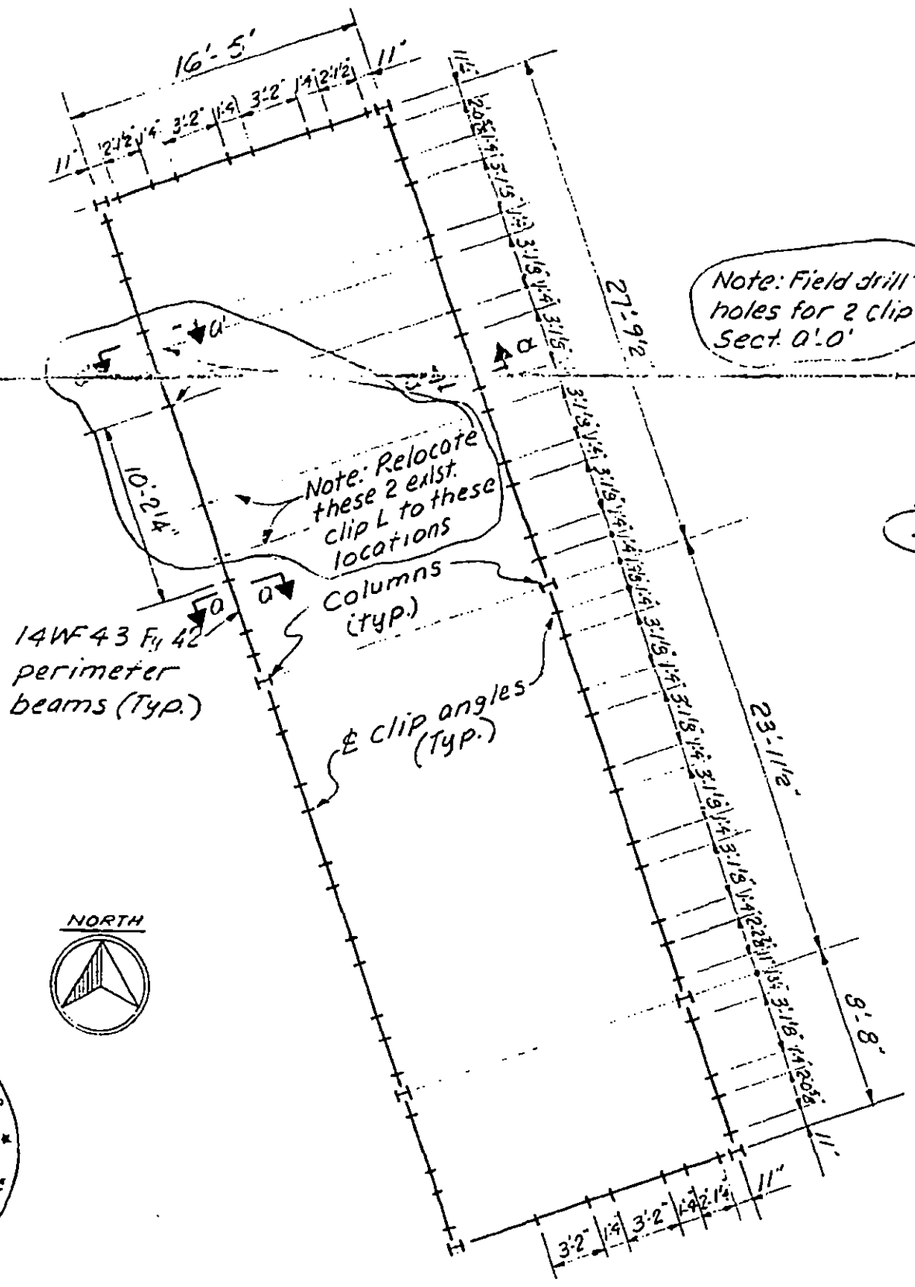

LOCATION OF CLIP Ls

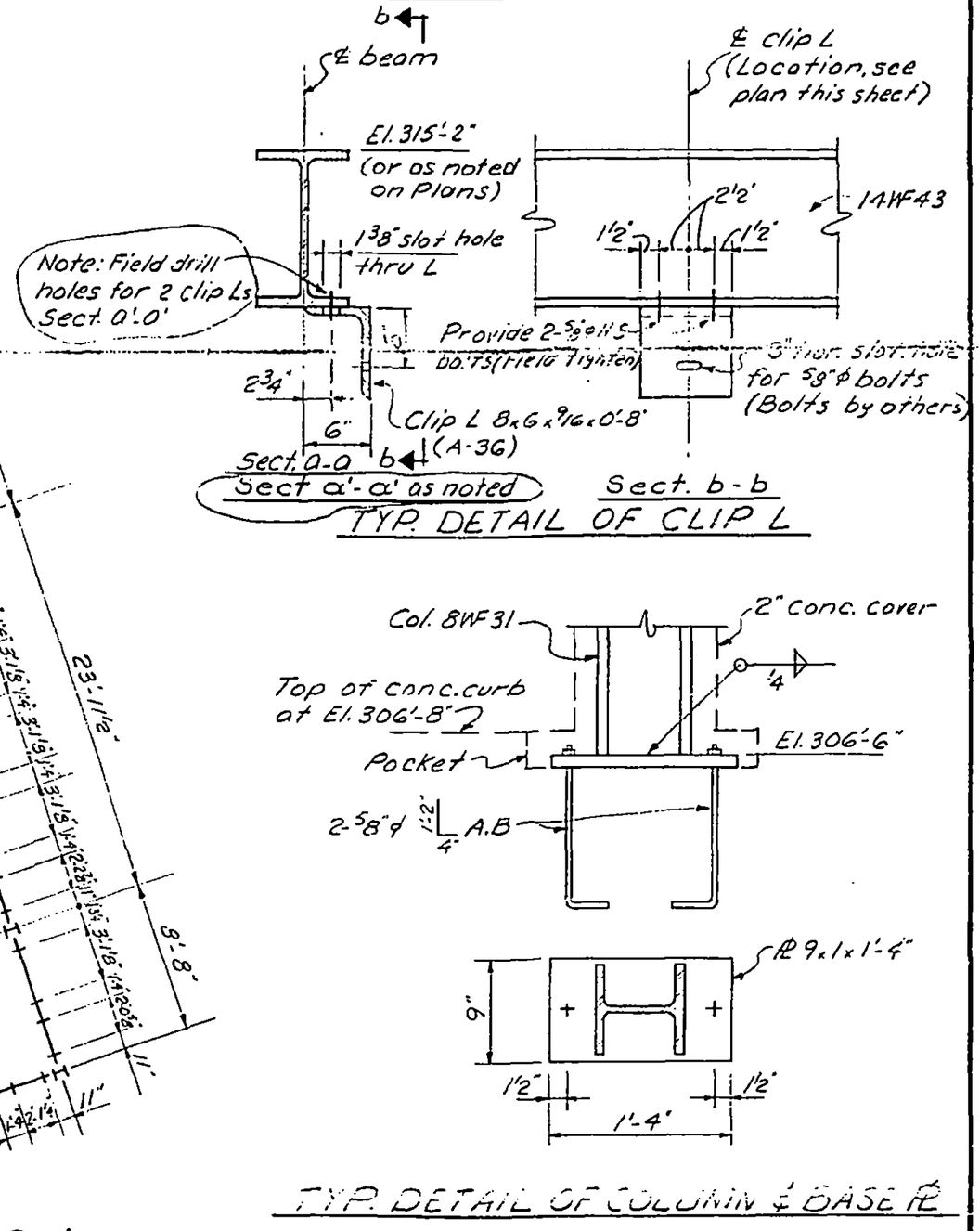

TYP. DETAIL OF CLIP L

TYP. DETAIL OF COLUMN & BASE ℄

DRAWN S.C.
REVIEWED E.L.

LICENSED PROFESSIONAL ENGINEER LESLIE E. ROBERTSON No. 34360 UNIVERSITY OF THE STATE OF NEW YORK

12-JK2-150

3-27-68

SKILLING, HELLE, CHRISTIANSEN, ROBERTSON — Structural & Civil Engineers

PROJECT THE WORLD TRADE CENTER | TITLE SOUTH PROJECTION - EXHAUST HOUSING | DATE 6-6-69

REVISIONS

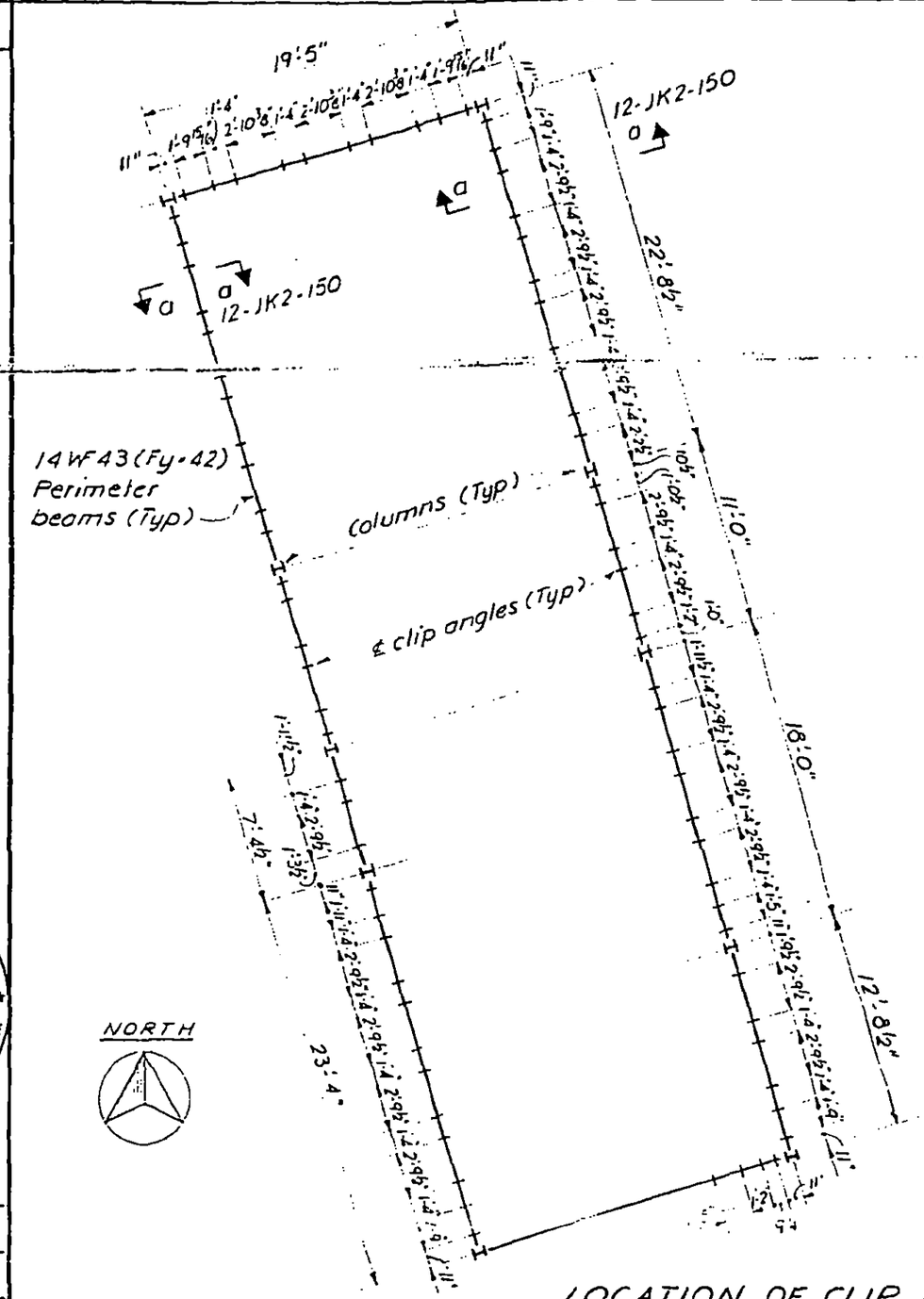

LOCATION OF CLIP Ls

Notes:

1. See 12-JK2-150 for detail of clip Ls under perimeter beams and detail of columns.

LICENSED PROFESSIONAL ENGINEER
LESLIE E. ROBERTSON
No. 34360
UNIVERSITY OF THE STATE OF NEW YORK

DESIGNED

DRAWN F. Smith

REVIEWED E.L.

12-JK2-151

SKILLING, HELLE, CHRISTIANSEN, ROBERTSON — Structural & Civil Engineers

PROJECT THE WORLD TRADE CENTER | TITLE DETAIL OF PLATE GIRDER | DATE 9-13-68

REVISIONS
1-8-69

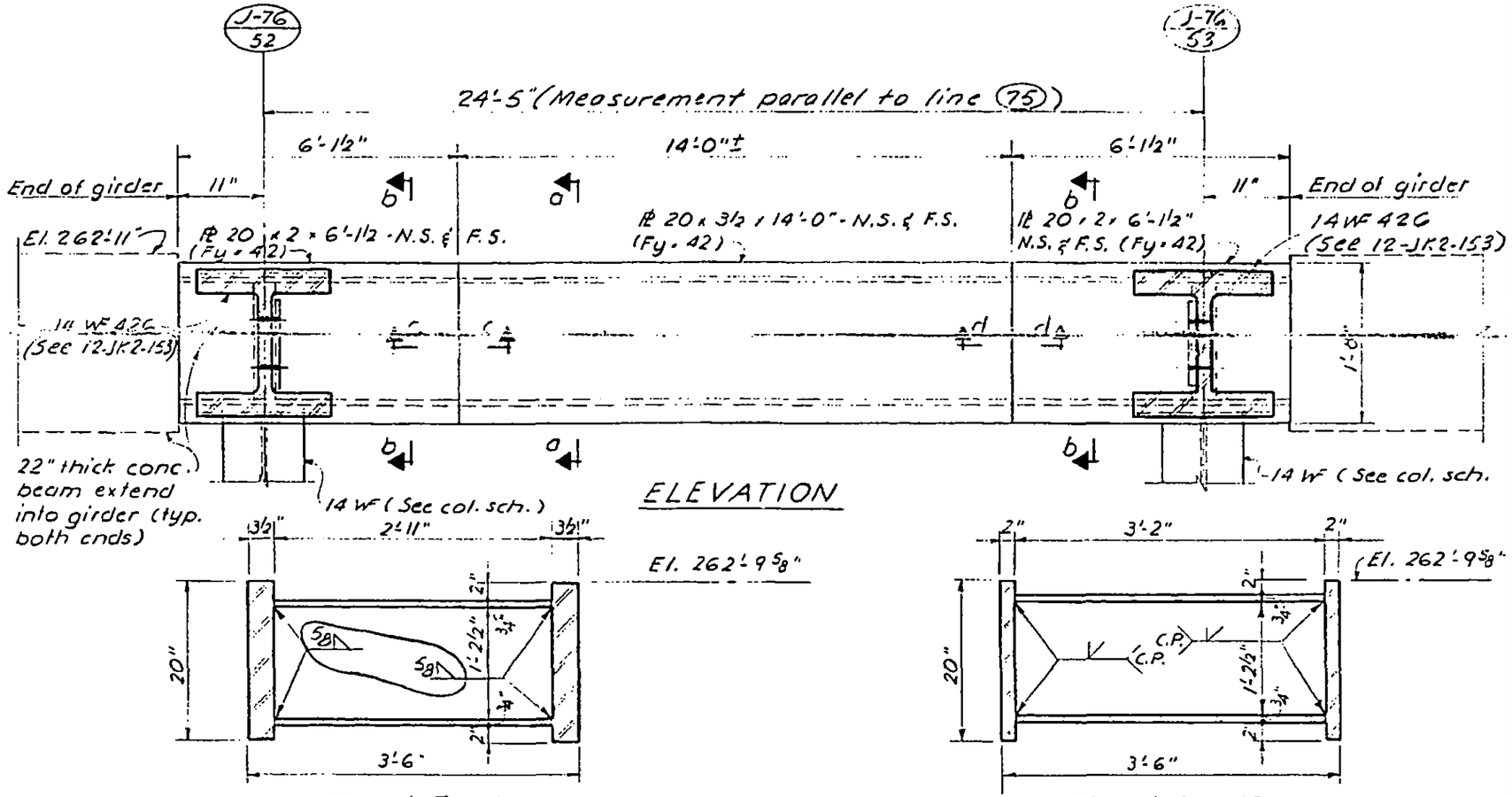

All mat. Fy = 42

Section a-a

All mat. Fy = 42

Section b-b

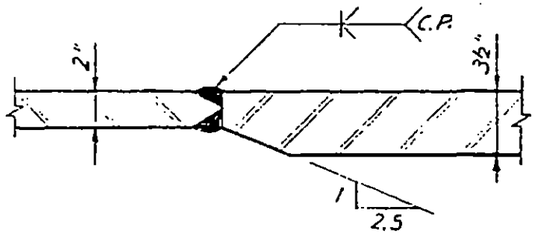

Section c-c (as shown)

Section d-d (opp. hand)

Notes:
1. All welds to be E 70xx.
2. All bolts to be A-325 friction type.
3. See dwg. 12-JK2-153 for connection of 14 WF 426 to girder.

LICENSED PROFESSIONAL ENGINEER — LESLIE E. ROBERTSON — No. 34360 — UNIVERSITY OF THE STATE OF NEW YORK

DESIGNED
DRAWN A.F.
REVIEWED E.L.

12-JK2-152

SKILLING, HELLE, CHRISTIANSEN, ROBERTSON — Structural & Civil Engineers

PROJECT THE WORLD TRADE CENTER | TITLE DETAIL OF BEAMS ADJACENT TO ESCALATOR | DATE 9-13-68

REVISIONS

5-29-69

2-11-70

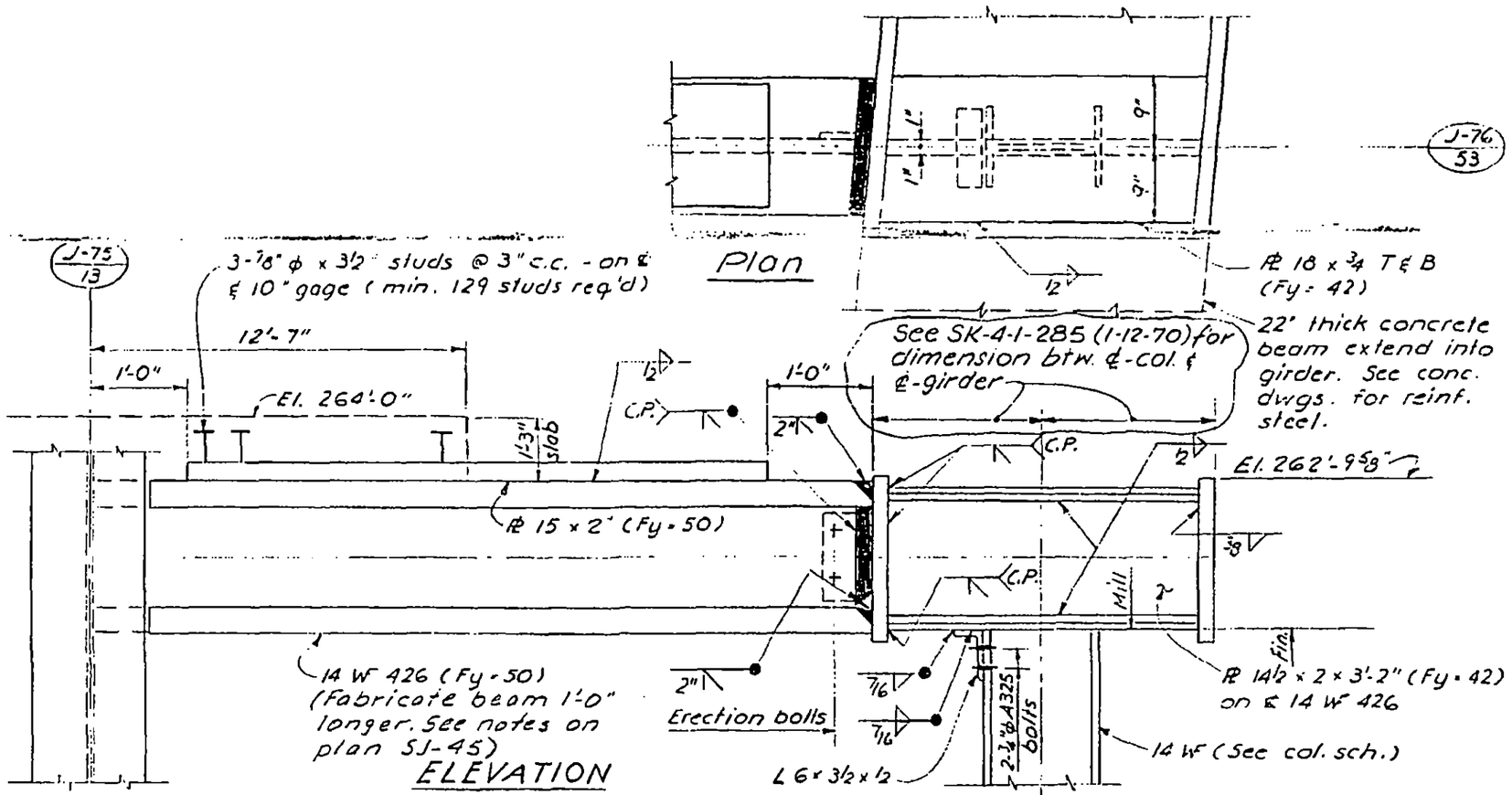

(Opp. hand for 14 WF At col. J75-9)

Notes:

1. All welds to be E 70xx
2. All bolts to be A-325 friction type.
3. See dwg. 12-JK2-152 for horizontal girder.
4. See also Dwg SK-4-1-285 (1-12-70), Change No. 533.061)

LICENSED PROFESSIONAL ENGINEER — LESLIE E. ROBERTSON — No. 34360 — UNIVERSITY OF THE STATE OF NEW YORK

DESIGNED

DRAWN S.C.

REVIEWED E.L.

12-JK2-153

SKILLING, HELLE, CHRISTIANSEN, ROBERTSON — Structural & Civil Engineers

PROJECT: THE WORLD TRADE CENTER | TITLE: DETAIL OF BEAMS ADJACENT TO STAIRWAY | DATE: 9-13-68

REVISIONS

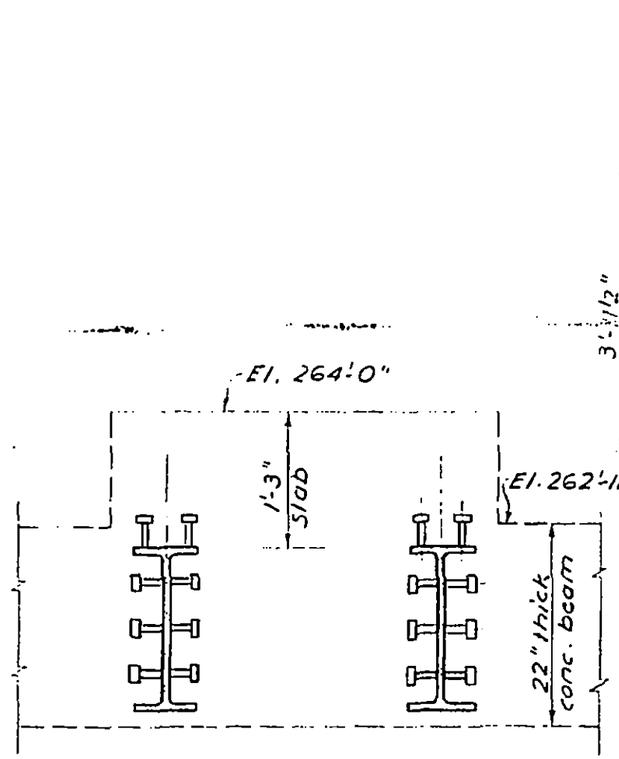

Section a-a

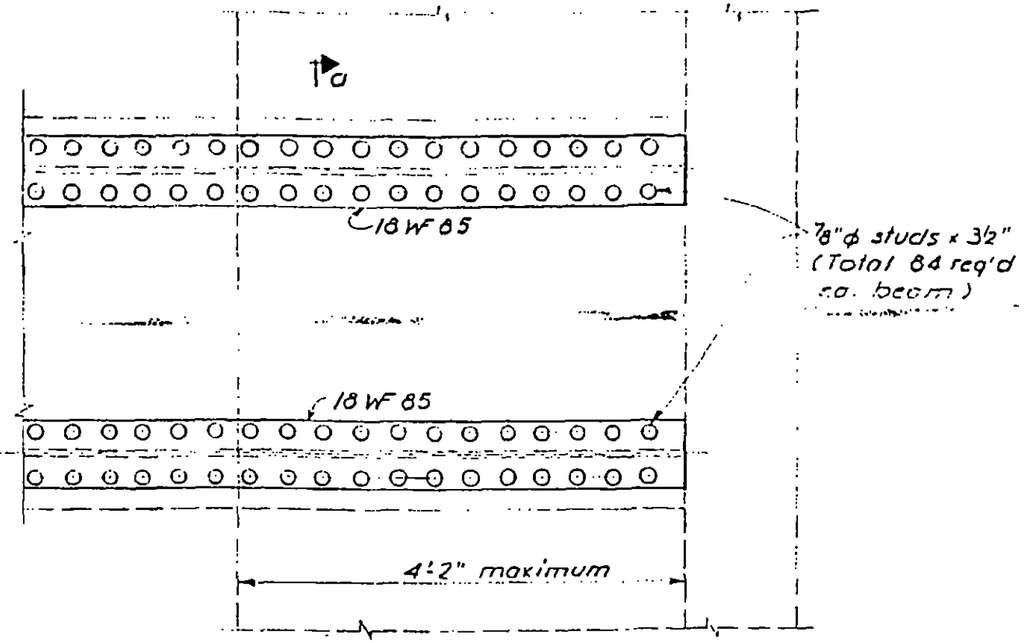

Plan

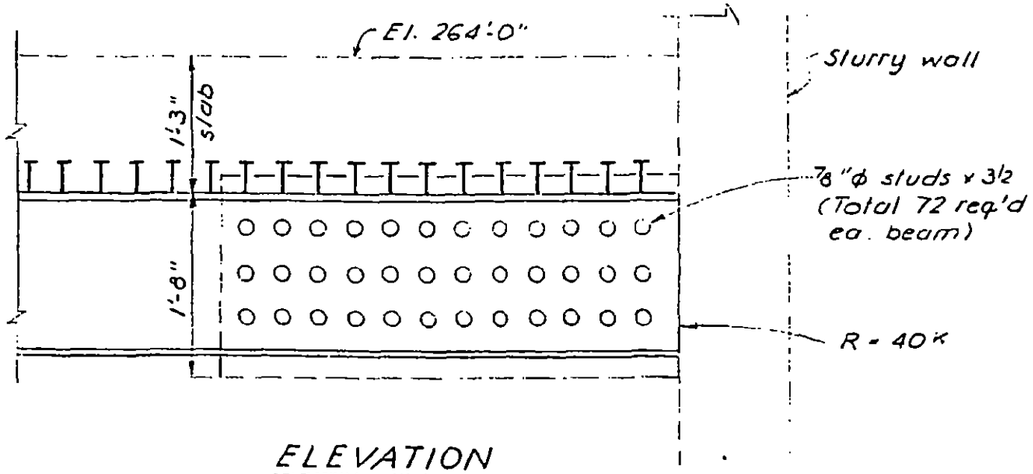

ELEVATION

Notes:
1. Fabricate beams one foot longer. See notes on SJ-45.

LICENSED PROFESSIONAL ENGINEER — LESLIE E. ROBERTSON — No. 34360 — UNIVERSITY OF THE STATE OF NEW YORK

DESIGNED

DRAWN

REVIEWED

12-JK2-154

SKILLING, HELLE, CHRISTIANSEN, ROBERTSON — Structural & Civil Engineers

PROJECT: THE WORLD TRADE CENTER | TITLE: DETAIL OF PLATE GIRDER | DATE: 9-13-68

REVISIONS
1-8-69

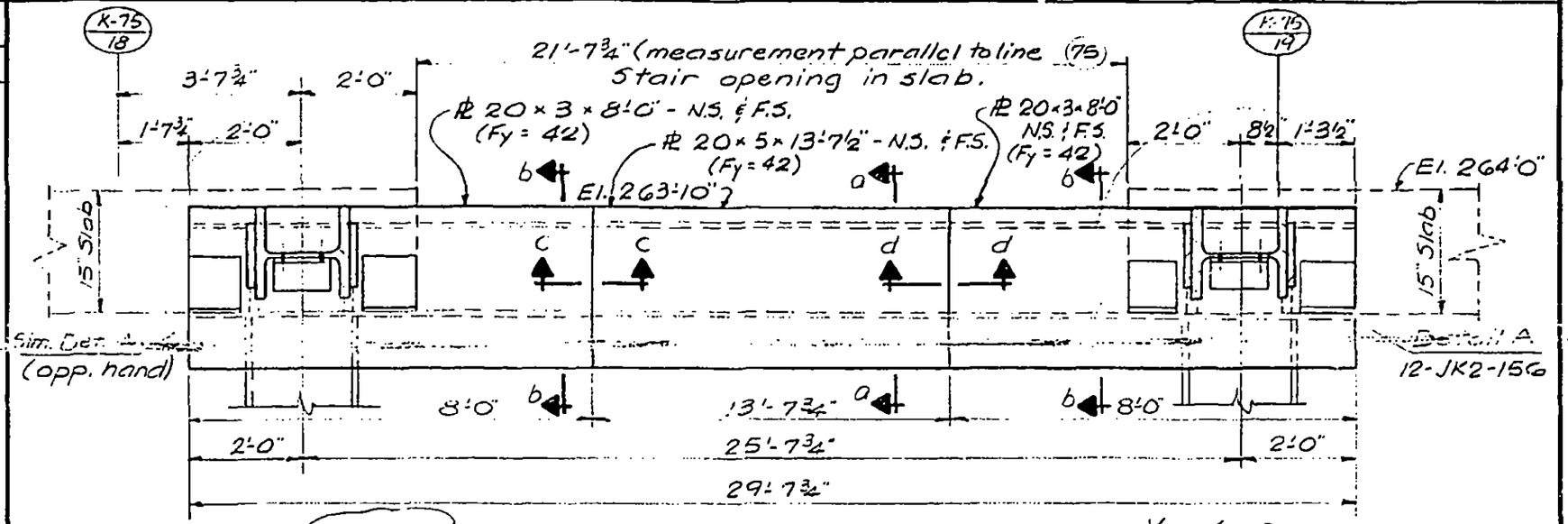

ELEVATION

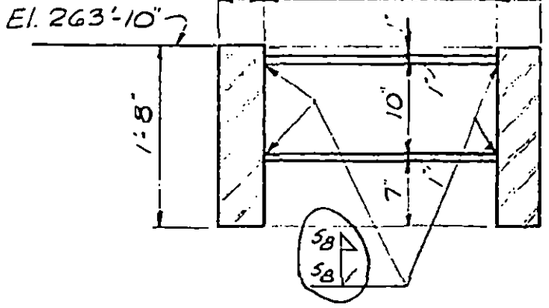

SECTION a-a
(All material, Fy = 42)

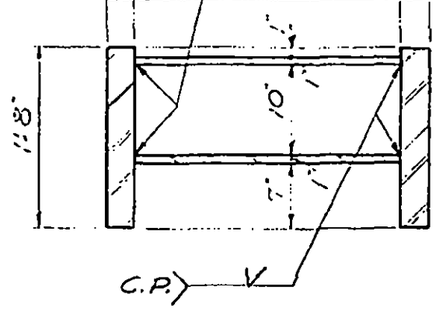

SECTION b-b
(All materials, Fy = 42)

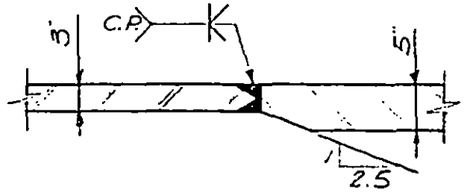

SECTION c-c (As shown)

SECTION d-d (Opp. hand)

Notes:
1. All welds to be E 70 XX
2. All bolts to be A325 friction type.

LICENSED PROFESSIONAL ENGINEER — LESLIE E. ROBERTSON — No. 34360 — UNIVERSITY OF THE STATE OF NEW YORK

DESIGNED
DRAWN A.F.
REVIEWED E.L.

12-JK2-155

SKILLING, HELLE, CHRISTIANSEN, ROBERTSON — Structural & Civil Engineers

PROJECT THE WORLD TRADE CENTER | TITLE DETAIL OF PLATE GIRDER | DATE 9-13-68

REVISIONS

11-5-69 R

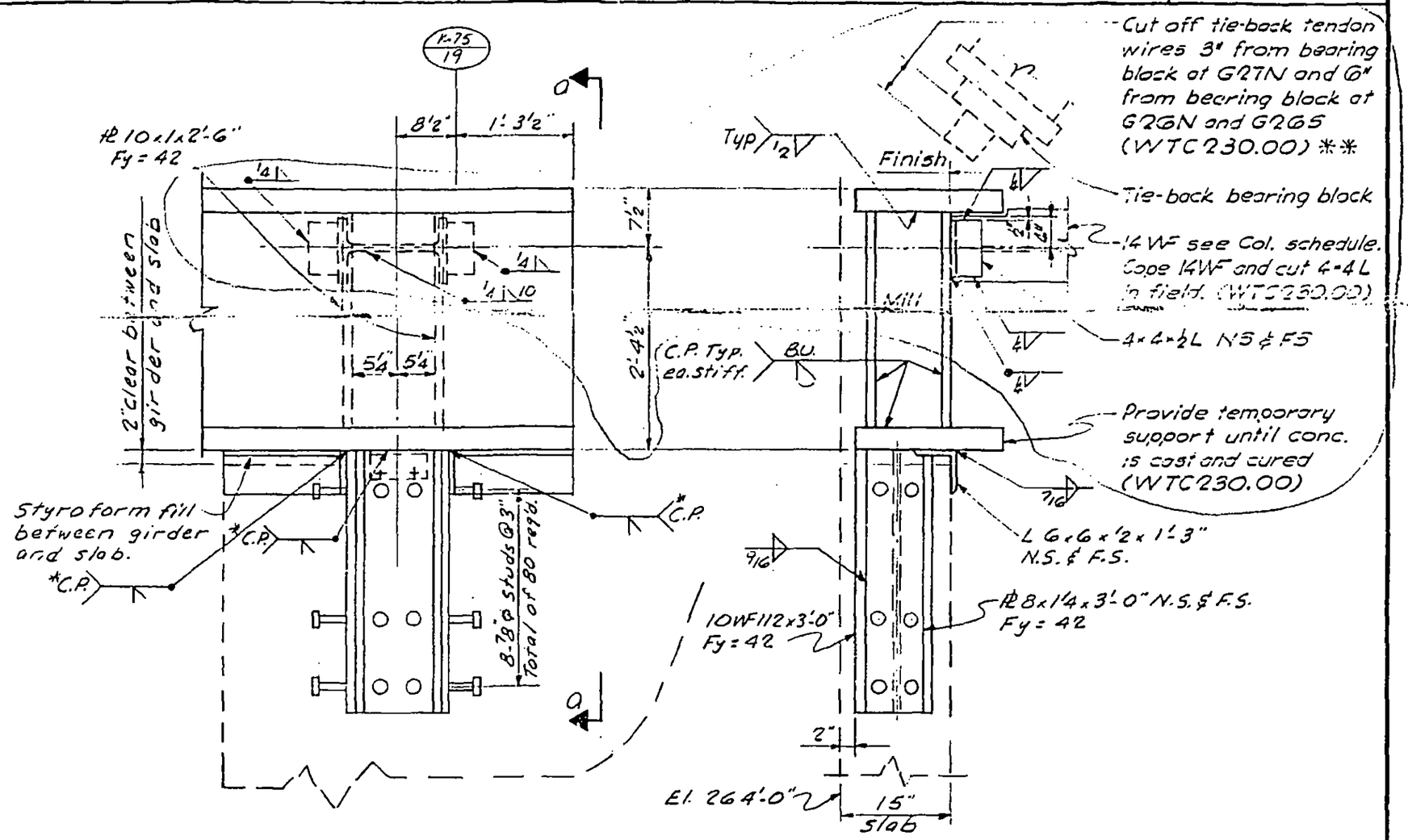

PLAN

Section a-a

* - Shop weld at contractor's option.

** - Cutting procedure shall avoid excess heat in tendon wires.

DETAIL A

Note:
1. All welds to be E70 xx.

DESIGNED

DRAWN S.C.

REVIEWED E.L.

12-JK2-156

LICENSED PROFESSIONAL ENGINEER — LESLIE E. ROBERTSON — No. 34360 — UNIVERSITY OF THE STATE OF NEW YORK

SKILLING, HELLE, CHRISTIANSEN, ROBERTSON — Structural & Civil Engineers

PROJECT THE WORLD TRADE CENTER | TITLE TEMPORARY STRUCTURE | DATE 10-15-68

REVISIONS
11-11-68
12-3-68

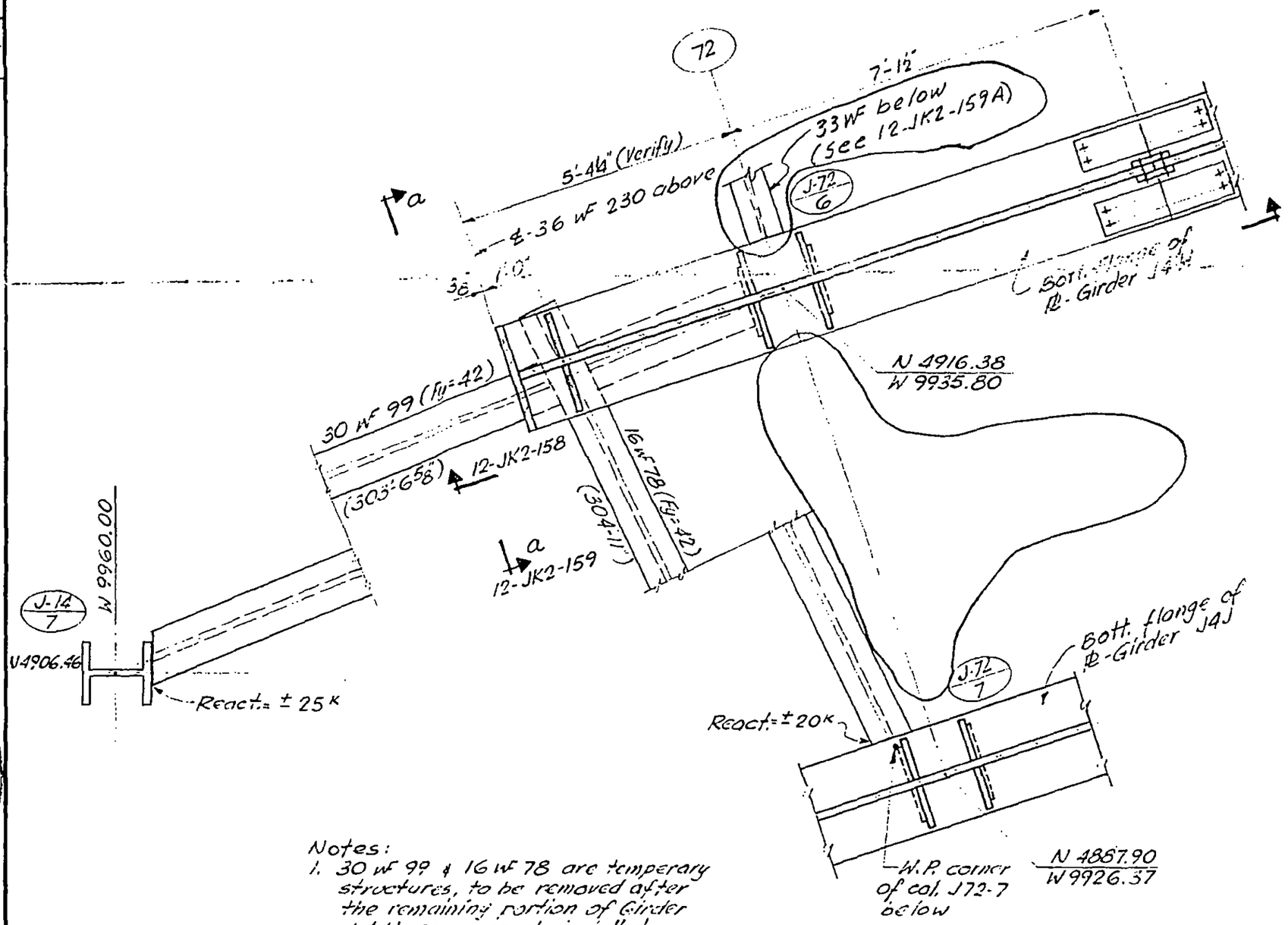

Notes:
1. 30 wf 99 & 16 wf 78 are temperary structures, to be removed after the remaining portion of Girder J4H are properly installed.

LICENSED PROFESSIONAL ENGINEER — LESLIE E. ROBERTSON — No. 34360 — STATE OF NEW YORK

DESIGNED
DRAWN
REVIEWED

12-JK2-157

SKILLING, HELLE, CHRISTIANSEN, ROBERTSON — Structural & Civil Engineers

PROJECT: THE WORLD TRADE CENTER | TITLE: TEMPORARY STRUCTURE | DATE: 10-15-68

REVISIONS

1-8-69

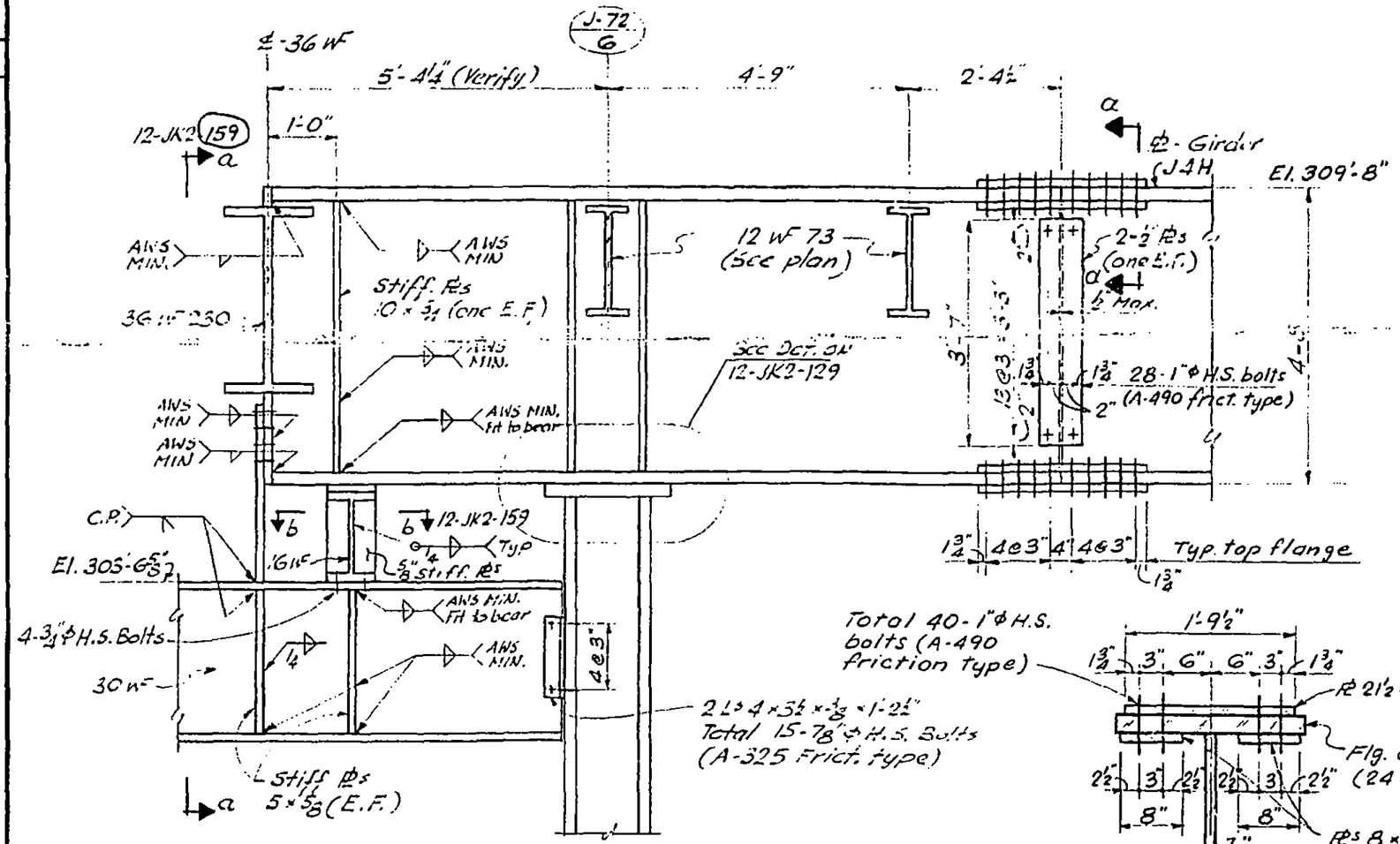

Section a-a
(typ. bottom flange)

Notes:
1. All Rs to have Fy: 42 KSI except as noted.
2. All welds to be E70XX.

LICENSED PROFESSIONAL ENGINEER — LESLIE E. ROBERTSON — No. 34360 — UNIVERSITY OF THE STATE OF NEW YORK

DESIGNED

DRAWN: A.F.

REVIEWED: E.L.

12-JK2-158

SKILLING, HELLE, CHRISTIANSEN, ROBERTSON — Structural & Civil Engineers

PROJECT THE WORLD TRADE CENTER | TITLE TEMPORARY STRUCTURE | DATE 10-15-68

REVISIONS

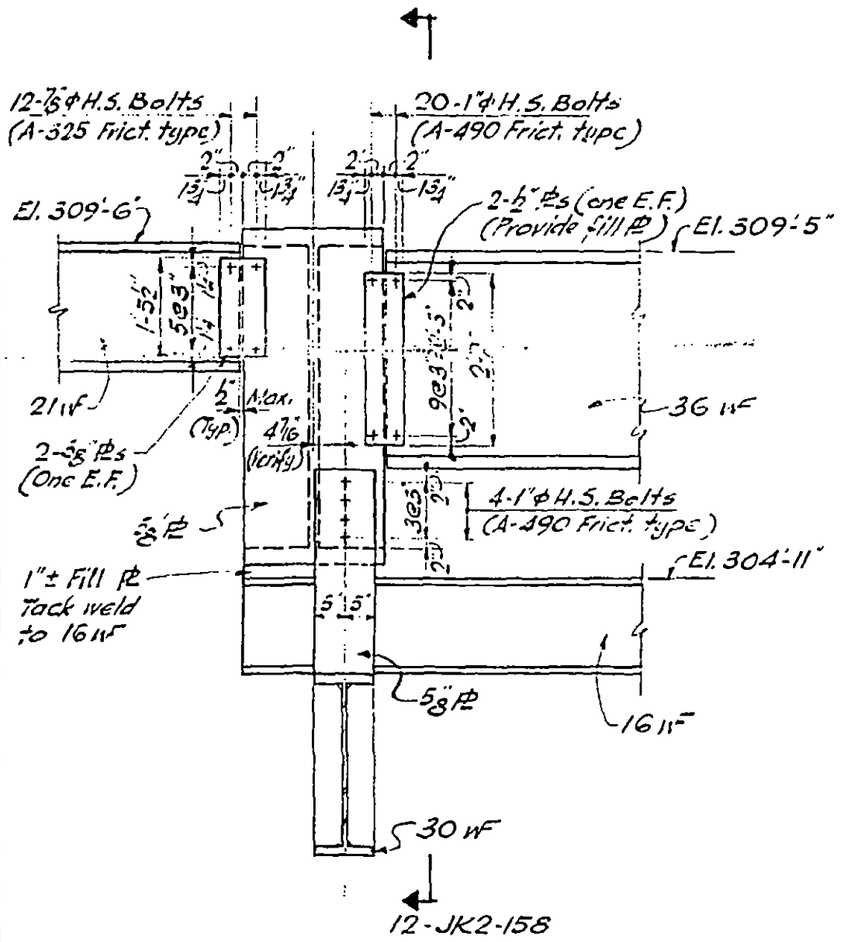

Section a-a

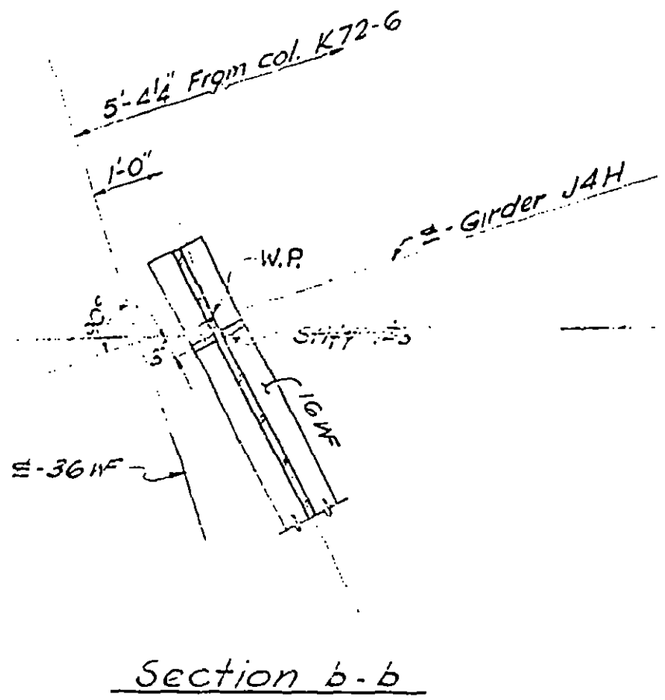

Section b-b

Notes:
1. All Pls to have Fy = 42 KSI Except as noted
2. All welds to be E 70 X X

LICENSED PROFESSIONAL ENGINEER — LESLIE E. ROBERTSON — NEW YORK

DESIGNED

DRAWN

REVIEWED

12-JK2-159

SKILLING, HELLE, CHRISTIANSEN, ROBERTSON — Structural & Civil Engineers

PROJECT: THE WORLD TRADE CENTER | TITLE: TEMPORARY STRUCTURE | DATE: 11-11-68

REVISIONS

12-3-68

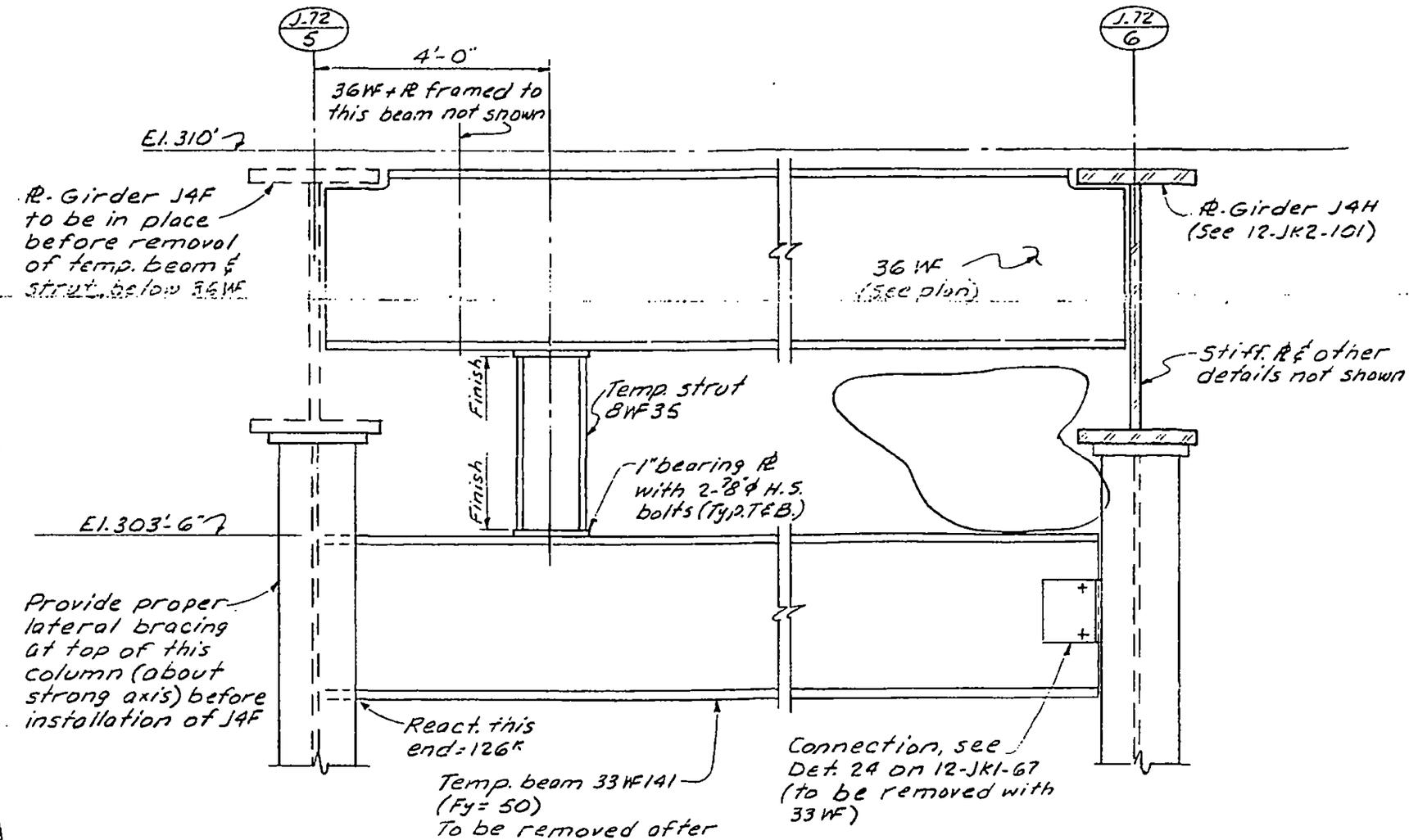

Notes:

1. All bolts to be A-325 friction type.
2. Temp. beam shown is designed for load from El. 310 only. Floor at El. 332 should not be built until 36WF is properly connected to R-Girder J4F.

LESLIE E. ROBERTSON — PROFESSIONAL ENGINEER — No. 34360 — UNIVERSITY OF THE STATE OF NEW YORK

DESIGNED

DRAWN

REVIEWED

12-JK2-159A

SKILLING, HELLE, CHRISTIANSEN, ROBERTSON — Structural & Civil Engineers

PROJECT THE WORLD TRADE CENTER | TITLE GIRDER DETAIL | DATE 11-5-68

REVISIONS

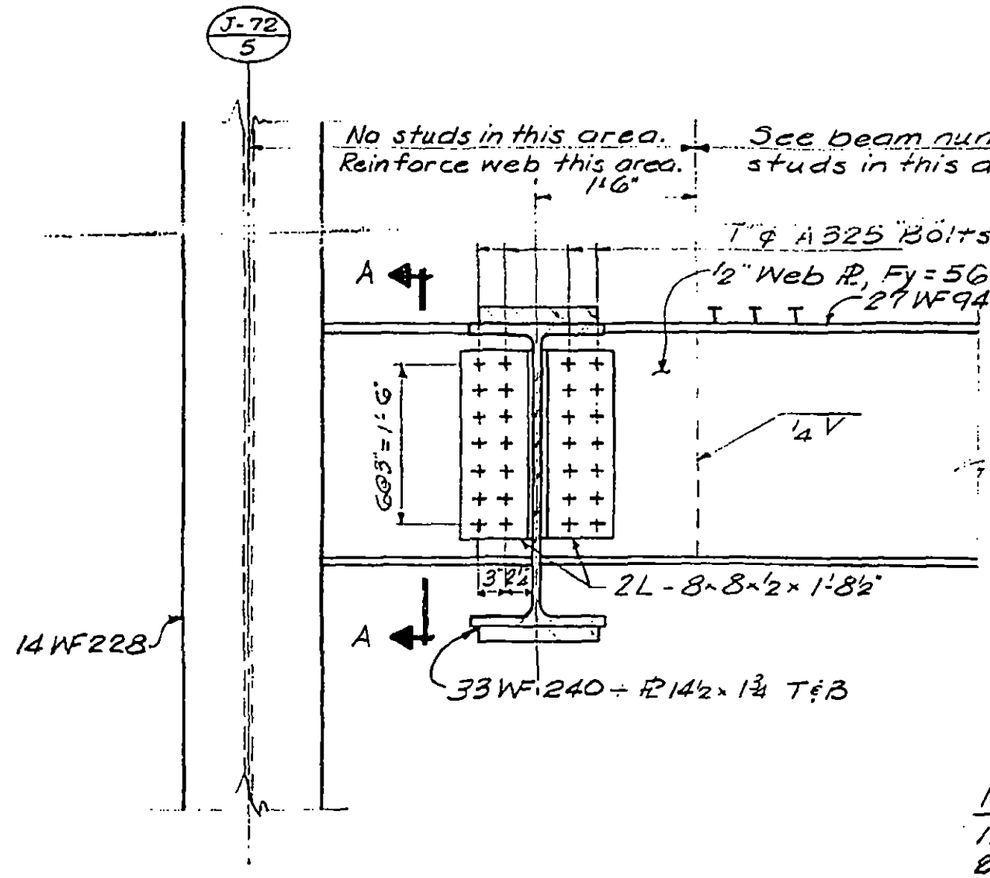

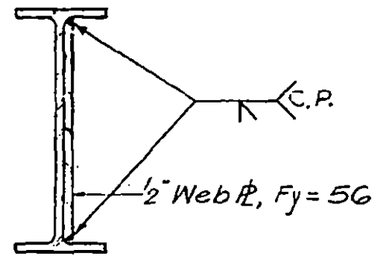

SECTION A-A

NOTES:
1) All welds are E70XX.
2) All bolts are A325 High Strength (friction type).

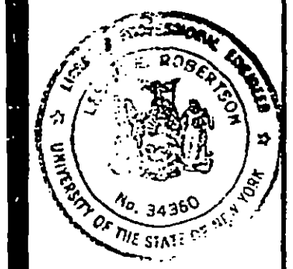

DESIGNED

DRAWN

REVIEWED

12-JK2-160

SKILLING, HELLE, CHRISTIANSEN, ROBERTSON — Structural & Civil Engineers

PROJECT THE WORLD TRADE CENTER | TITLE BEAM DETAIL | DATE 12-3-68

REVISIONS

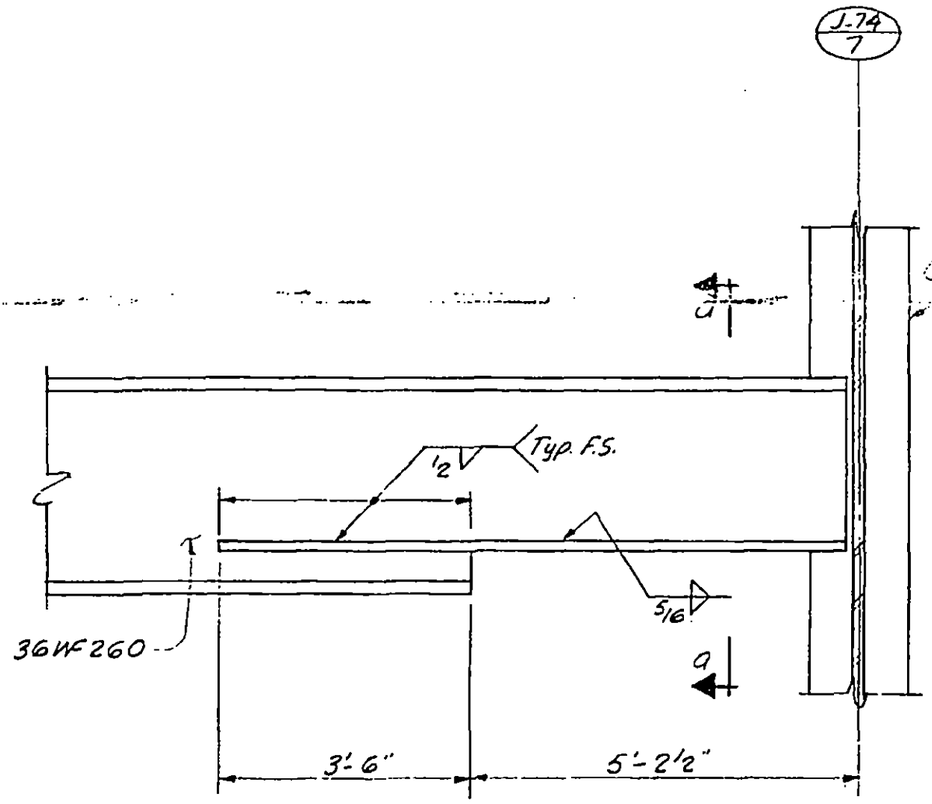

ELEVATION

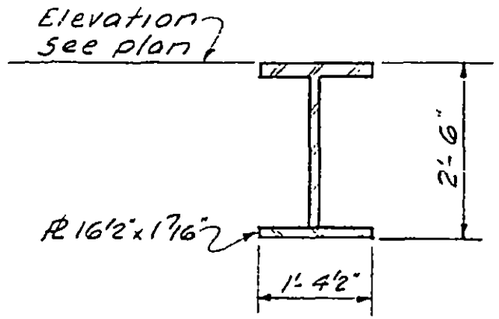

Section a-a

LICENSED PROFESSIONAL ENGINEER
LESLIE E. ROBERTSON
No. 34360
UNIVERSITY OF THE STATE OF NEW YORK

DESIGNED

DRAWN

REVIEWED

12-JK2-161

SKILLING, HELLE, CHRISTIANSEN, ROBERTSON — Structural & Civil Engineers

PROJECT: THE WORLD TRADE CENTER | TITLE: BEAM DETAILS | DATE: 11-27-68

REVISIONS

6-19-69

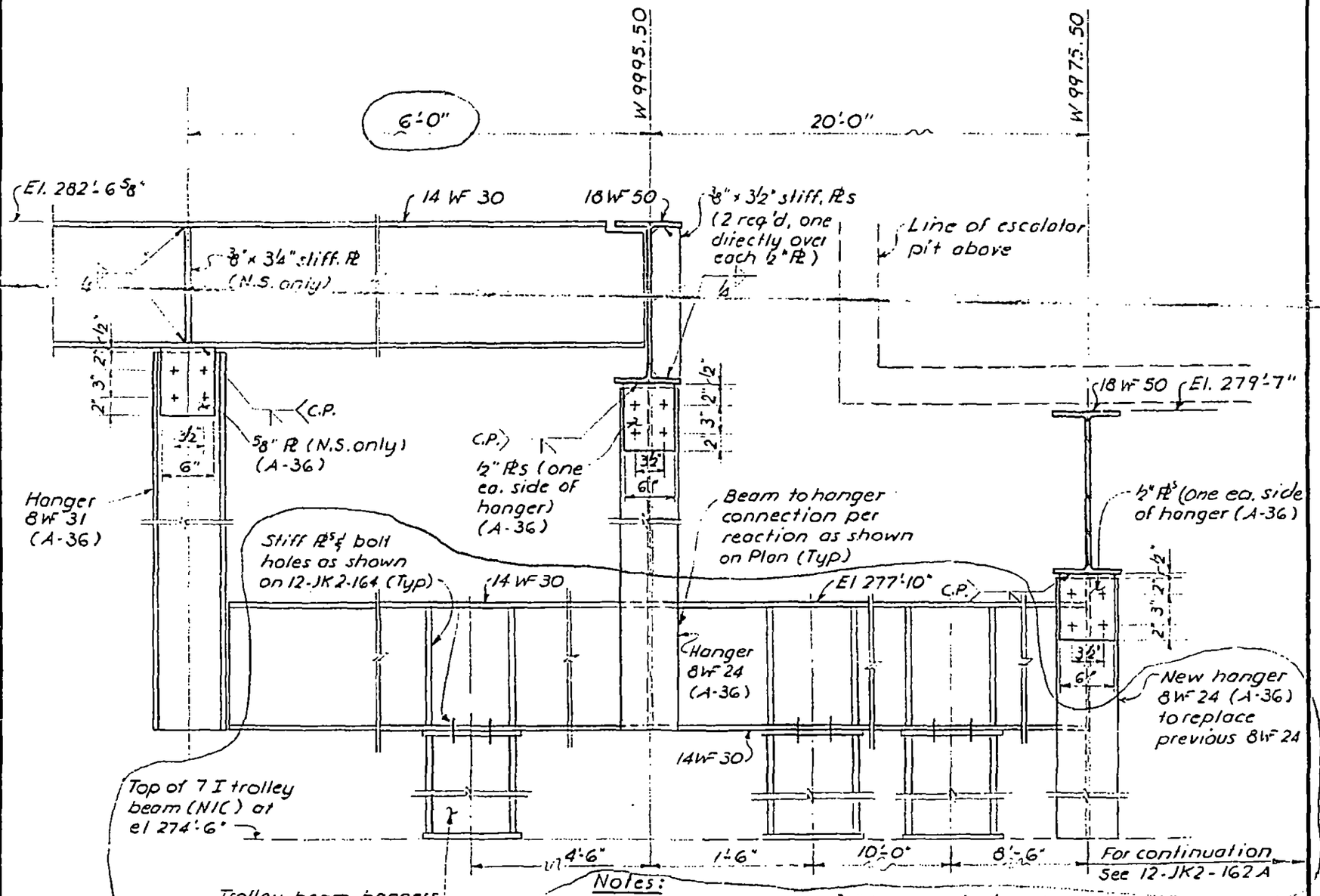

Notes:

1. All bolts to be 3/4" ϕ H.S. friction type.
2. All welds to be E70XX,
3. See 12-JK2-164 for typical detail of supports for future trolley beams.
4. Allow 6" erection clearance between ℄ hangers. Provide shims if necessary to insure surface contact for friction type H.S. bolts.

12-JK2-162

LICENSED PROFESSIONAL ENGINEER — LESLIE E. ROBERTSON — No. 34360 — UNIVERSITY OF THE STATE OF NEW YORK

DESIGNED

DRAWN: F. Smith

REVIEWED: E.L.

SKILLING, HELLE, CHRISTIANSEN, ROBERTSON — Structural & Civil Engineers

PROJECT: THE WORLD TRADE CENTER | TITLE: BEAM DETAILS | DATE: 6-19-69

REVISIONS

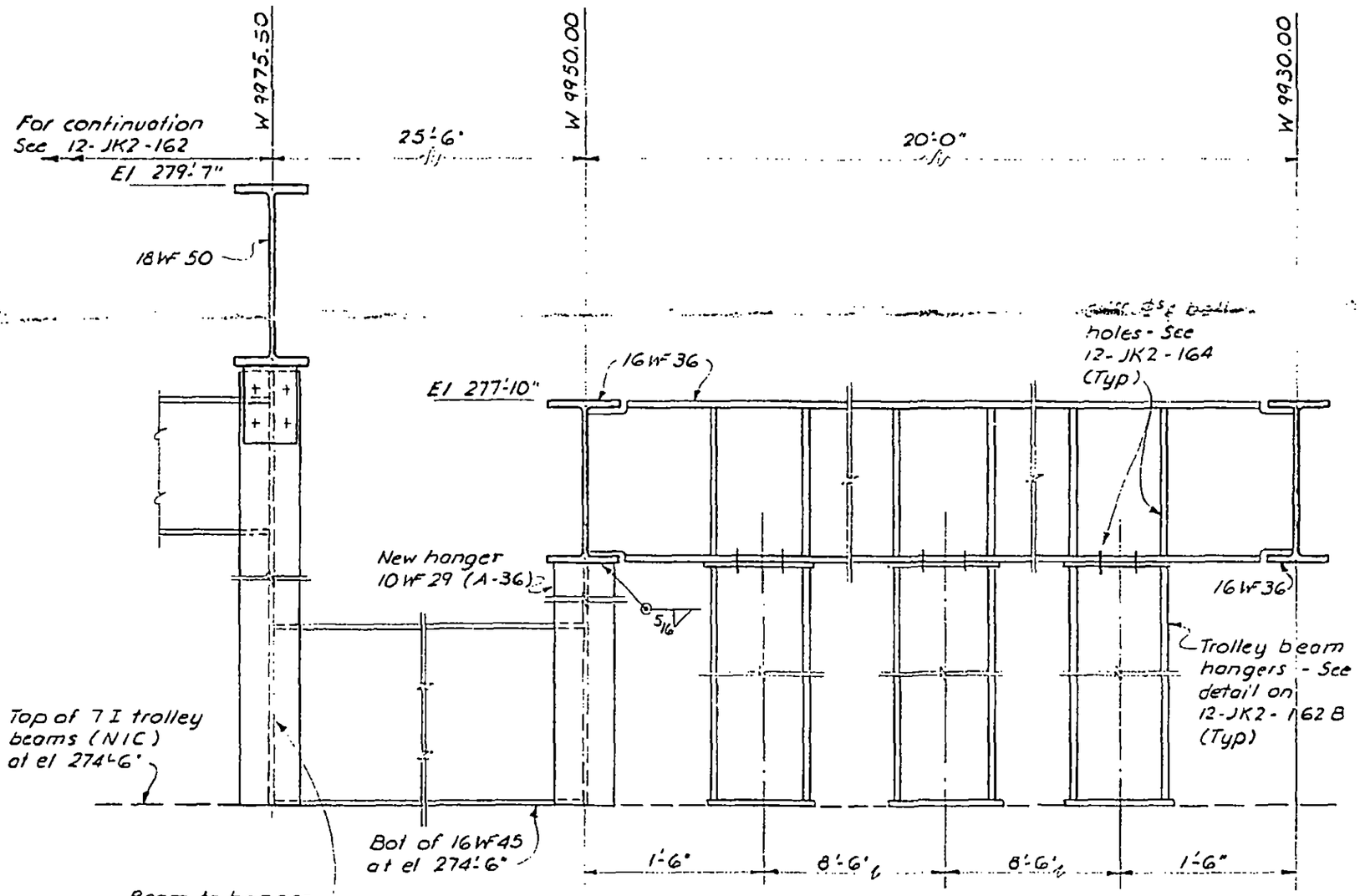

See Notes on 12-JK2-162

LICENSED PROFESSIONAL ENGINEER — LESLIE E. ROBERTSON — No. 34360 — UNIVERSITY OF THE STATE OF NEW YORK

DESIGNED

DRAWN: F. Smith

REVIEWED: E.L.

12-JK2-162A

SKILLING, HELLE, CHRISTIANSEN, ROBERTSON Structural & Civil Engineers

PROJECT THE WORLD TRADE CENTER | TITLE TROLLEY BEAM HANGER DETAILS | DATE 6-19-69

REVISIONS

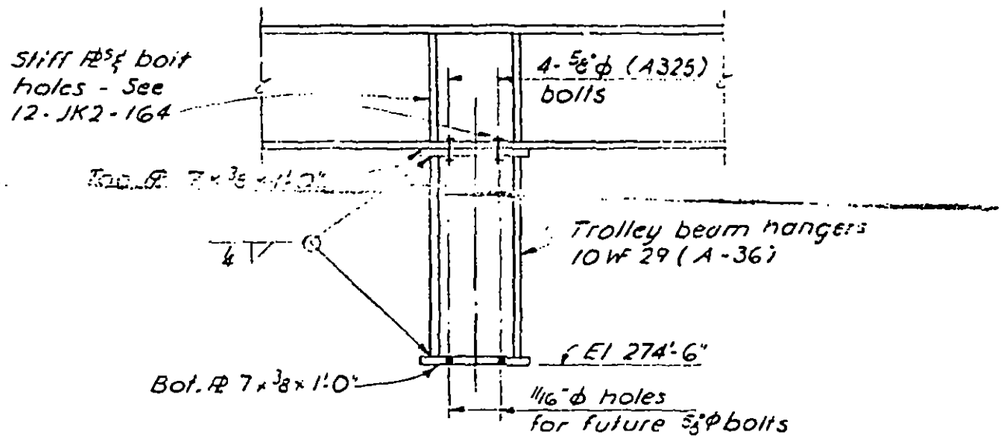

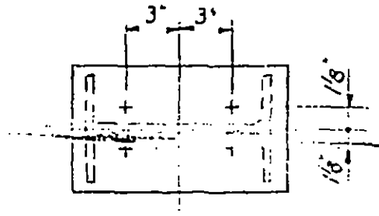

Plan of Bot. Plate

LICENSED PROFESSIONAL ENGINEER
LESLIE E. ROBERTSON
No. 34360
UNIVERSITY OF THE STATE OF NEW YORK

DRAWN F. Smith

REVIEWED E.L.

12-JK2-162B

SKILLING, HELLE, CHRISTIANSEN, ROBERTSON — Structural & Civil Engineers

PROJECT THE WORLD TRADE CENTER | TITLE BEAM DETAILS | DATE 11-27-68

REVISIONS

1-20-69

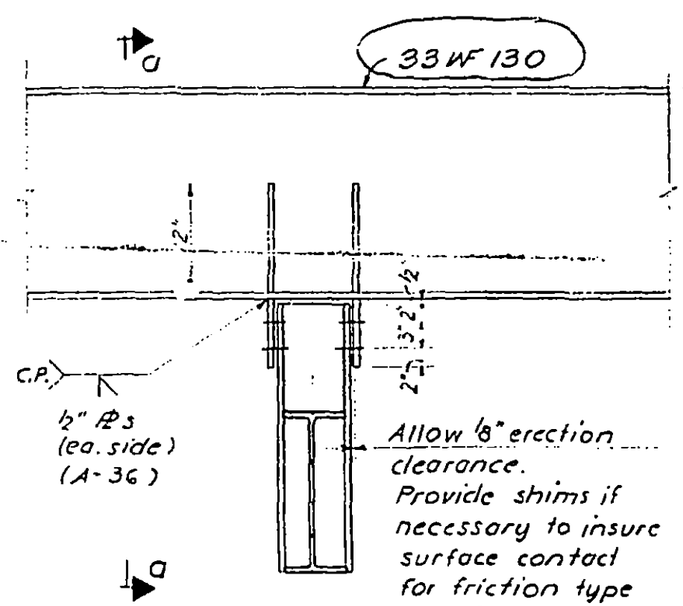

ELEVATION

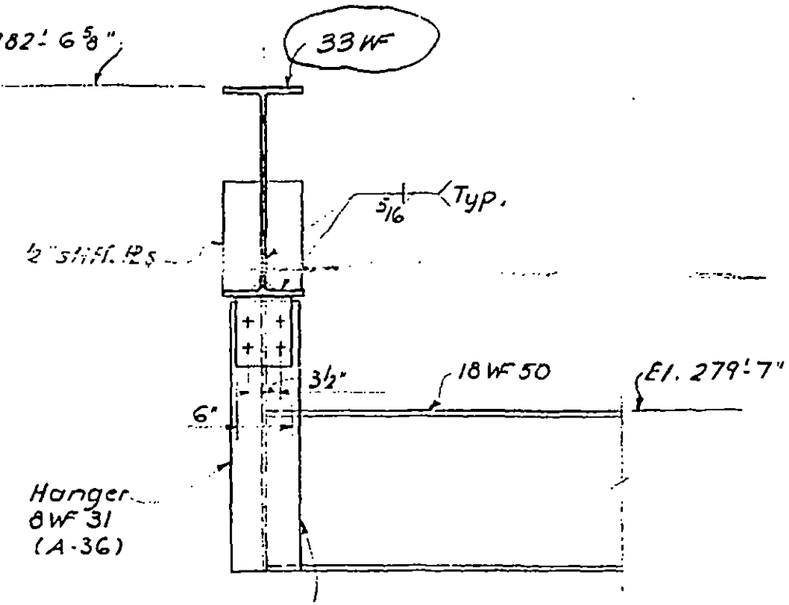

Beam to hanger connection per reaction as shown on Plan

Section a-a

Notes:
1. All bolts to be ¾" ϕ H.S. friction type.
2. All welds to be E 70xx.

LICENSED PROFESSIONAL ENGINEER LESLIE E. ROBERTSON No. 34360 UNIVERSITY OF THE STATE OF NEW YORK

DESIGNED

DRAWN S.C.

REVIEWED E.L.

12-JK2-163

SKILLING, HELLE, CHRISTIANSEN, ROBERTSON Structural & Civil Engineers

PROJECT THE WORLD TRADE CENTER | TITLE BEAM DETAILS | DATE 11-27-68

REVISIONS

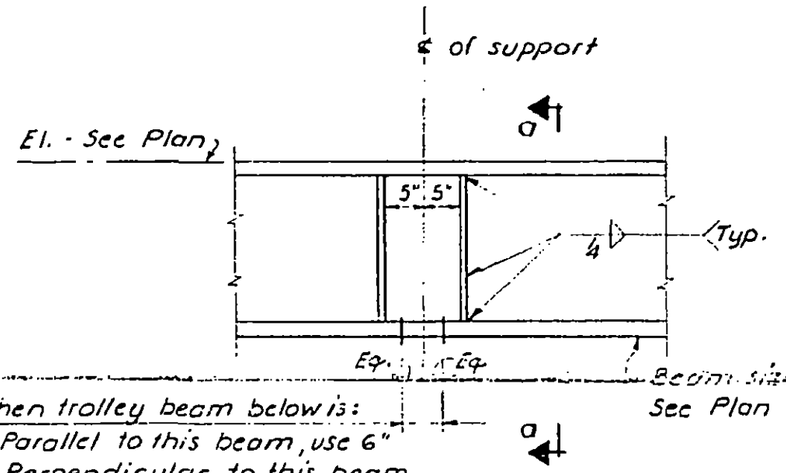

When trolley beam below is:
1. Parallel to this beam, use 6"
2. Perpendicular to this beam use g-value of beam below.

Elevation

(Where other beam frame into this one, see detail below.)

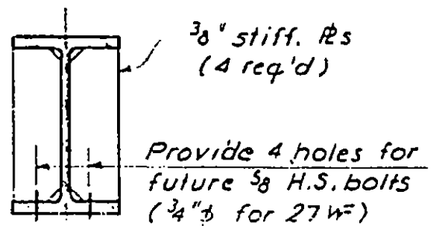

When trolley beam below is:
1. Parallel to this beam, use g-value of beam below.
2. Perpendicular to this beam, use g-value of this beam.

Section a-a

TYPICAL DETAIL OF SUPPORT FOR FUTURE TROLLEY BEAMS

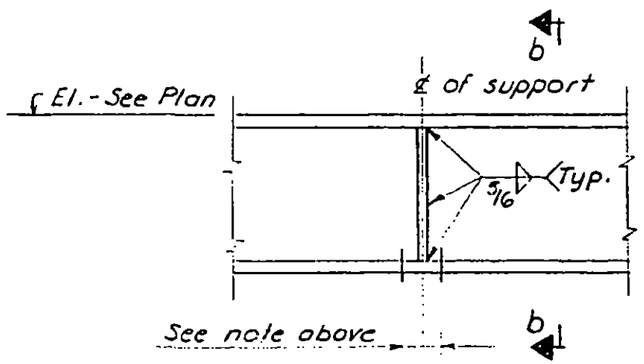

Elevation

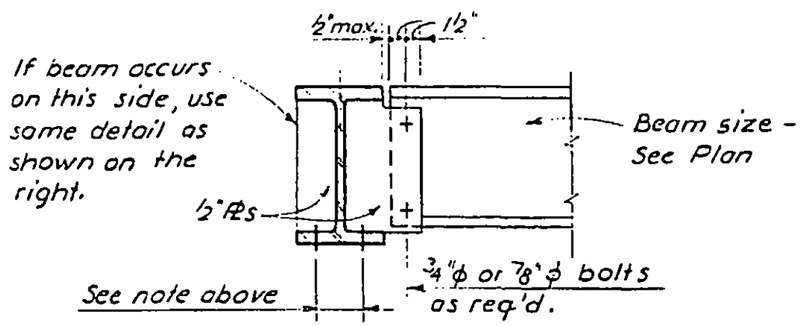

Section b-b

LICENSED PROFESSIONAL ENGINEER
LESLIE E. ROBERTSON
No. 34360
UNIVERSITY OF THE STATE OF NEW YORK

DESIGNED

DRAWN

REVIEWED

12-JK2-164

SKILLING, HELLE, CHRISTIANSEN, ROBERTSON — Structural & Civil Engineers

PROJECT: THE WORLD TRADE CENTER | TITLE: DETAIL OF PLATE GIRDER | DATE: 12-17-68

REVISIONS

2-19-69

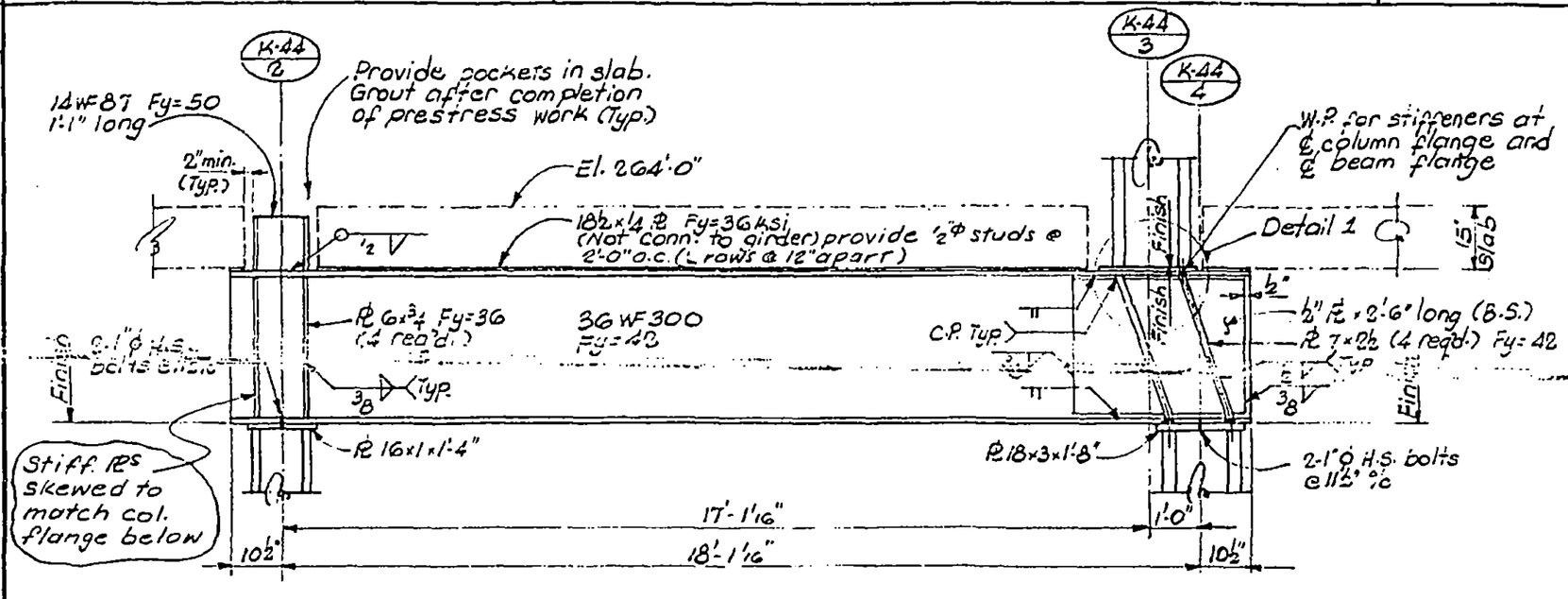

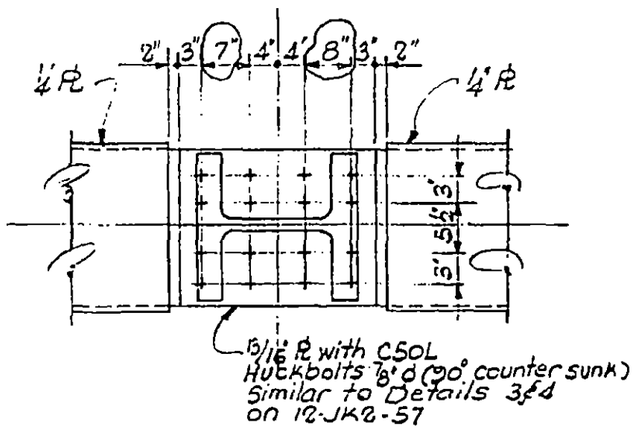

Detail 1

LICENSED PROFESSIONAL ENGINEER — LESLIE E. ROBERTSON — No. 34360 — UNIVERSITY OF THE STATE OF NEW YORK

DESIGNED

DRAWN S.C.

REVIEWED E.L.

12-JK2-165

SKILLING, HELLE, CHRISTIANSEN, ROBERTSON — Structural & Civil Engineers

PROJECT: THE WORLD TRADE CENTER | TITLE: DETAIL OF PLATE GIRDER | DATE: 12-17-68

REVISIONS
1-8-69
4-30-69

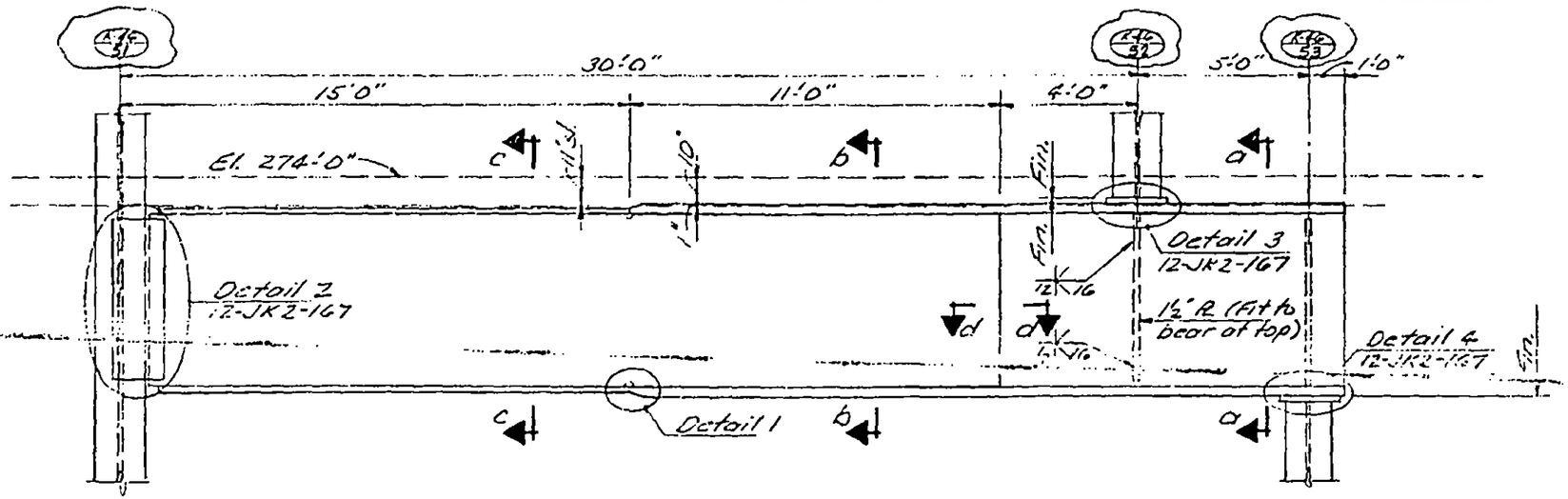

Elevation

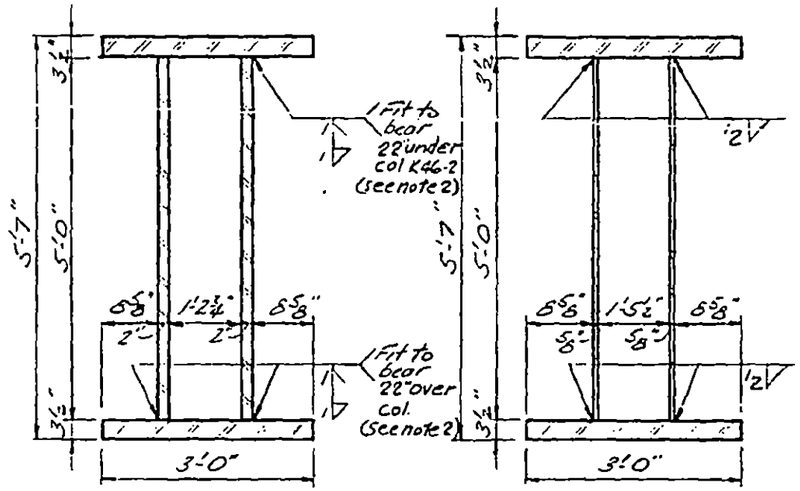

Section a-a

Section b-b

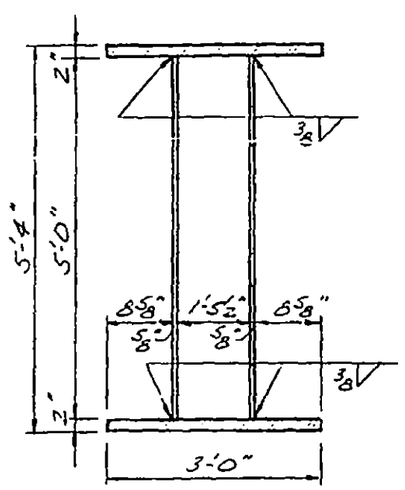

Section c-c

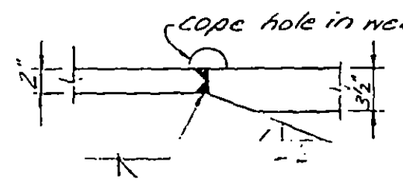

Detail 1

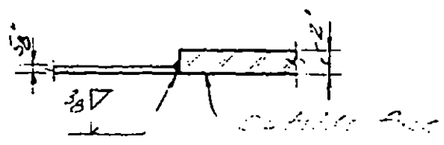

Section d-d

Note:
1. All material to be Fy42.
2. At contractor's option to use complete penetration weld 22" at column.

LICENSED PROFESSIONAL ENGINEER — LESLIE E. ROBERTSON — No. 34360 — UNIVERSITY OF THE STATE OF NEW YORK

DESIGNED
DRAWN A.F.
REVIEWED

12-JKZ-166

SKILLING, HELLE, CHRISTIANSEN, ROBERTSON — Structural & Civil Engineers

PROJECT THE WORLD TRADE CENTER | TITLE DETAIL OF PLATE GIRDER | DATE 12-17-68

REVISIONS

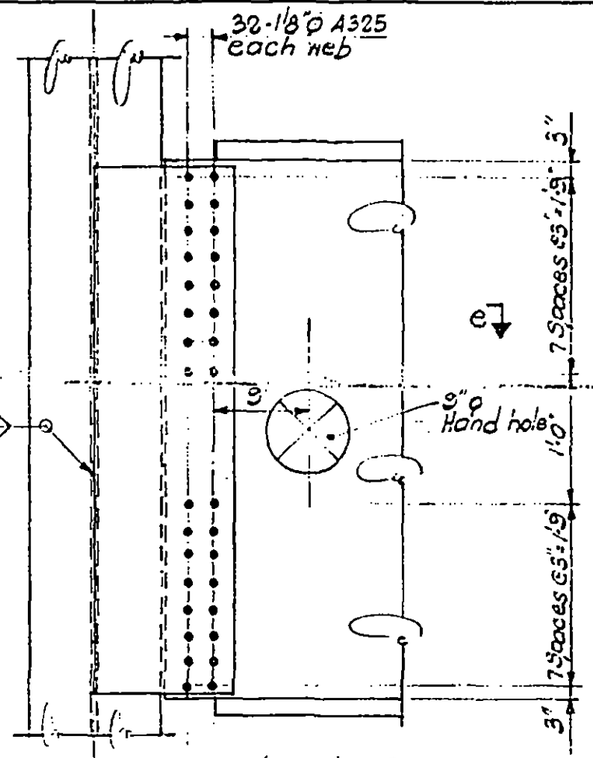

Detail 2

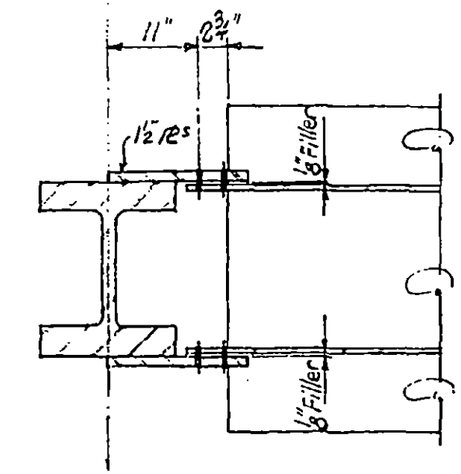

Section e-e

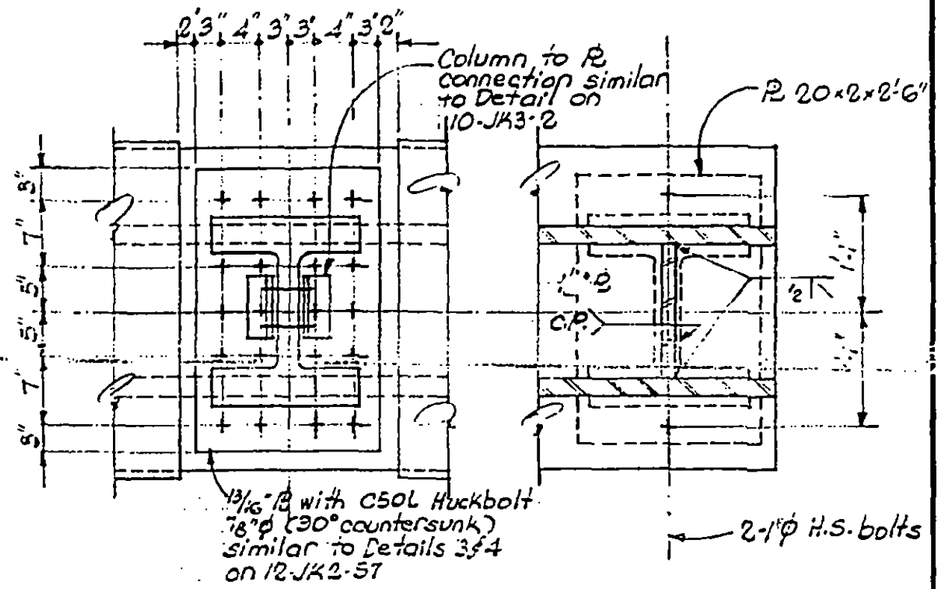

Detail 3

Detail 4

LICENSED PROFESSIONAL ENGINEER LESLIE E. ROBERTSON No. 34360 UNIVERSITY OF THE STATE OF NEW YORK

DRAWN

REVIEWED

12-JK2-167

SKILLING, HELLE, CHRISTIANSEN, ROBERTSON — Structural & Civil Engineers

PROJECT THE WORLD TRADE CENTER | TITLE DETAIL OF PLATE GIRDER | DATE 12-17-68

REVISIONS
2-19-69

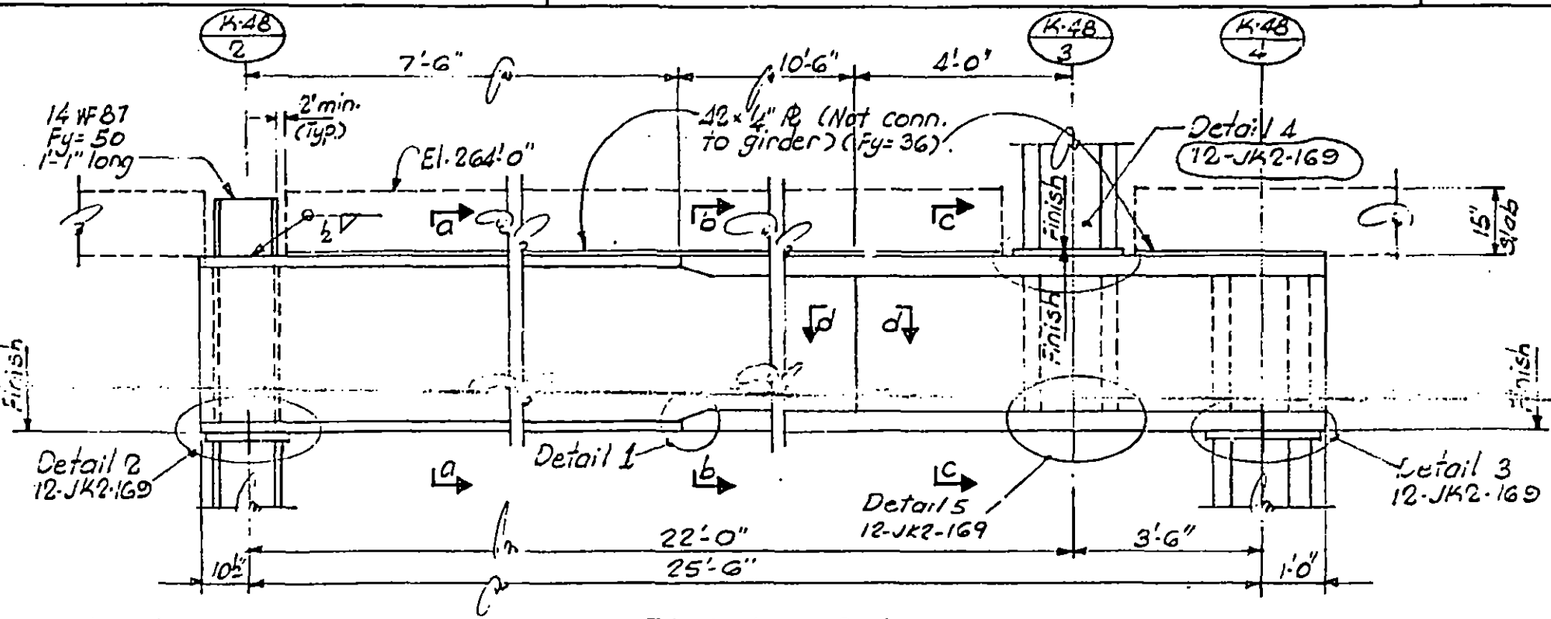

ELEVATION

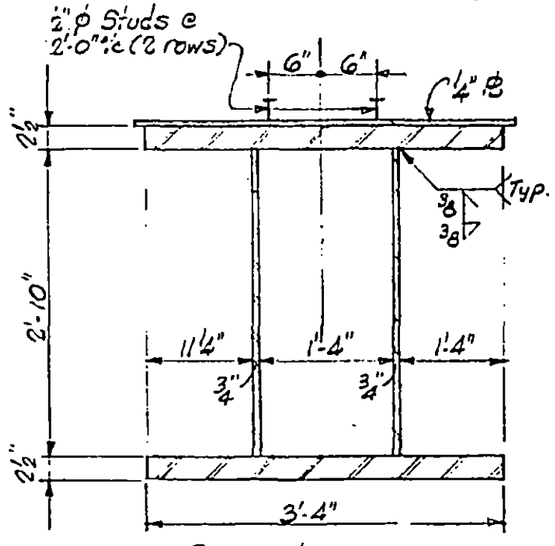

Section a-a

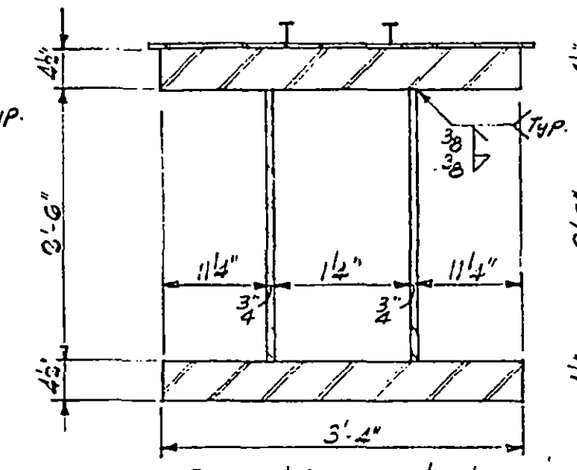

Section b-b

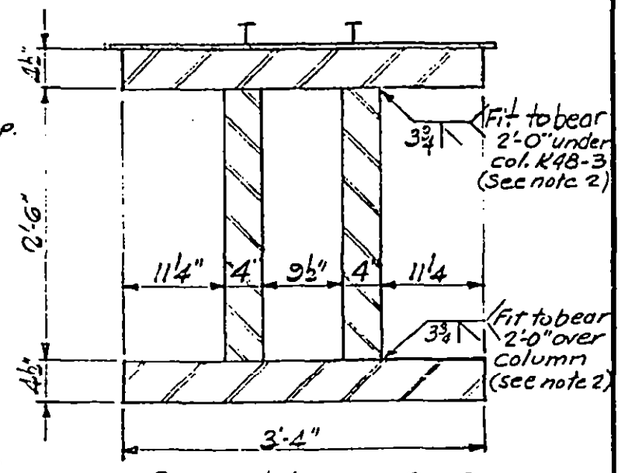

Section c-c

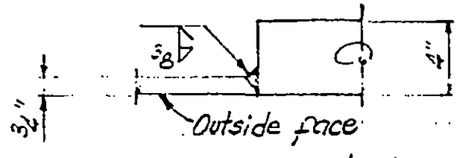

Section d-d

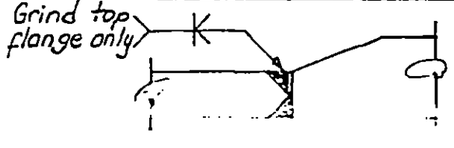

Detail 1

NOTE:
1. All material to be Fy=42 unless noted.
2. At contractor's option to use complete penetration weld 2'-0" at column

12-JK2-168

DESIGNED
DRAWN S.C.
REVIEWED E.L.

SKILLING, HELLE, CHR'STIANSEN, ROBERTSON — Structural & Civil Engineers

PROJECT THE WORLD TRADE CENTER | TITLE DETAIL OF PLATE GIRDER | DATE 12-17-68

REVISIONS

2-19-69

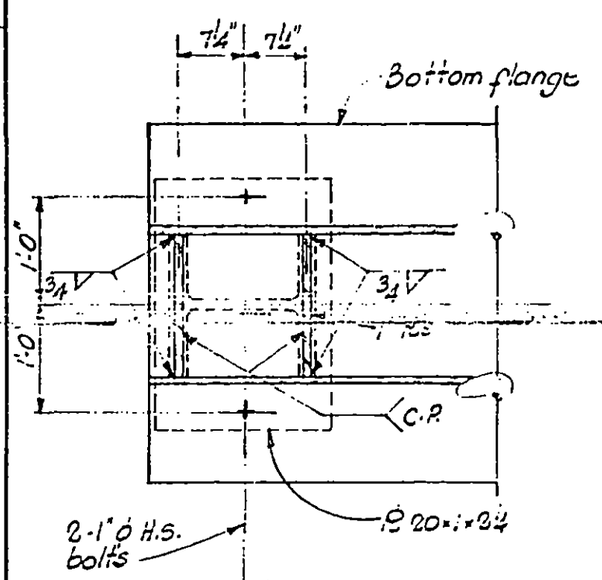

Detail 2

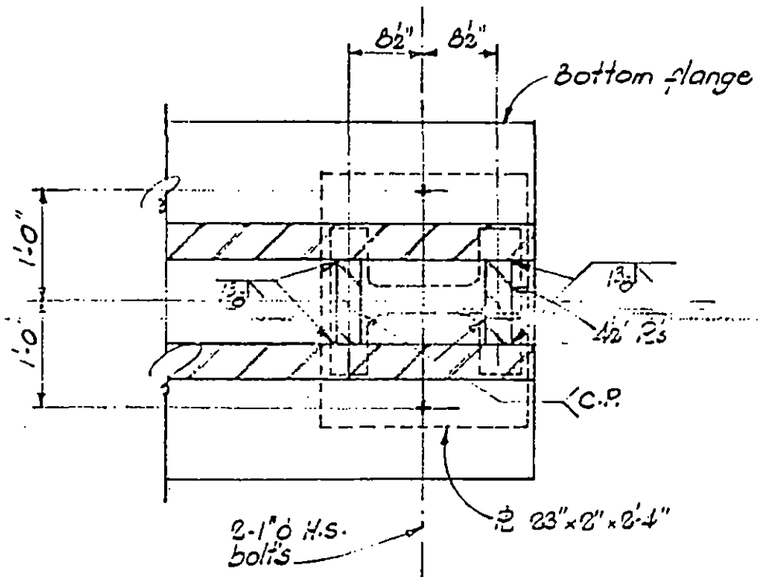

Detail 3

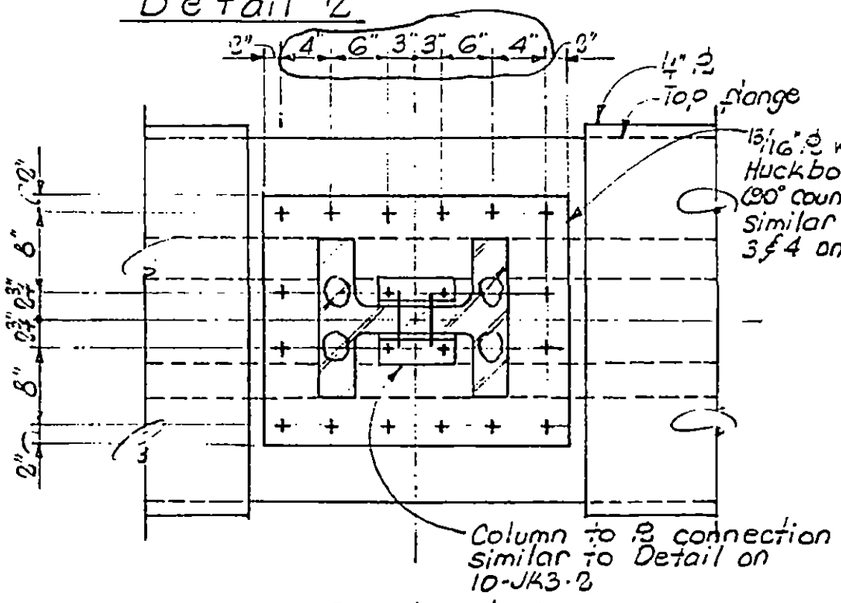

Detail 4

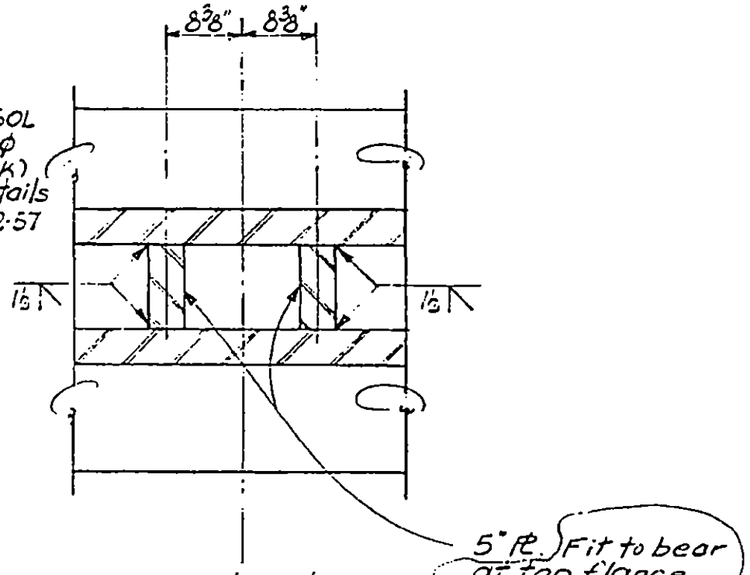

Detail 5

LICENSED PROFESSIONAL ENGINEER
LESLIE E. ROBERTSON
No. 34360
UNIVERSITY OF THE STATE OF NEW YORK

DESIGNED

DRAWN
S.C.

REVIEWED
E.L.

12-JK2-169

SKILLING, HELLE, CHRISTIANSEN, ROBERTSON — Structural & Civil Engineers

PROJECT: THE WORLD TRADE CENTER | TITLE: DETAILS OF PLATE GIRDER | DATE: 3-21-69

REVISIONS

5-29-69

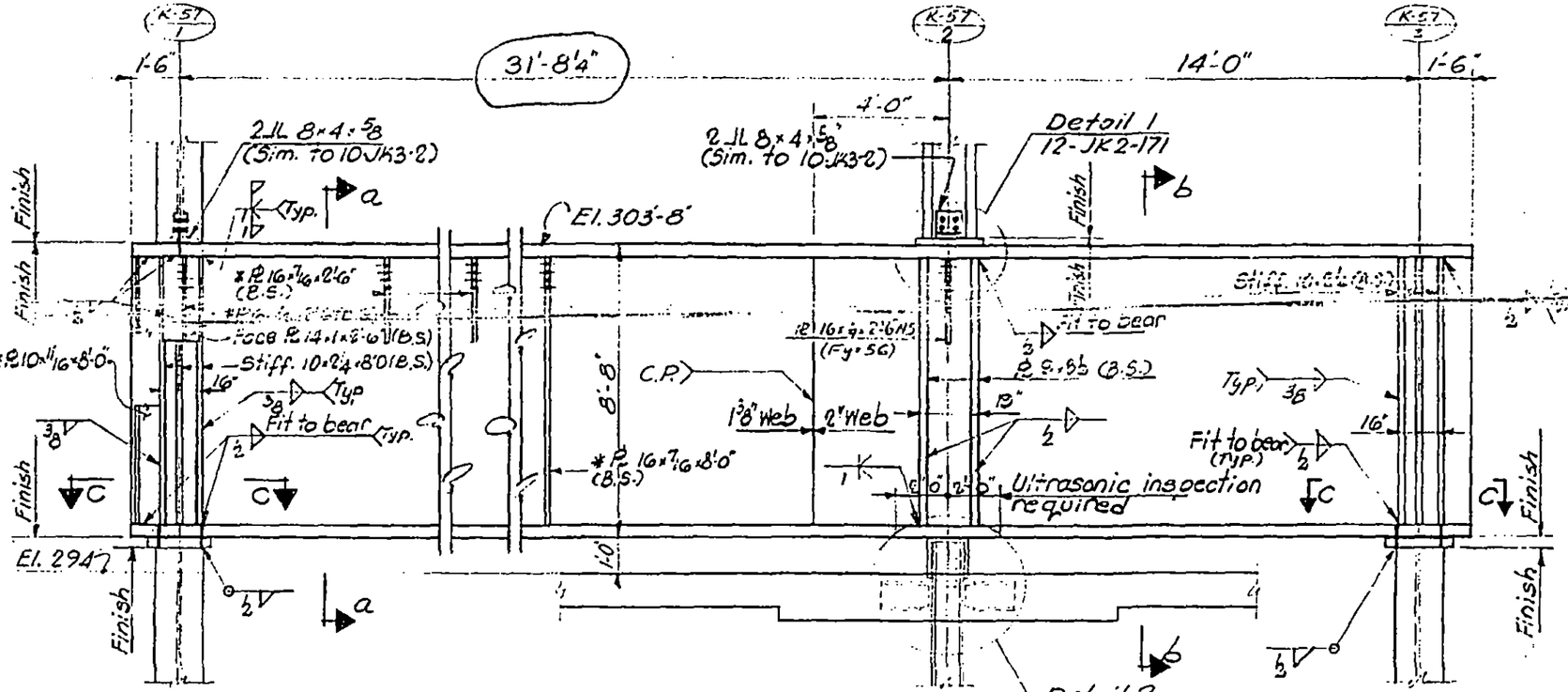

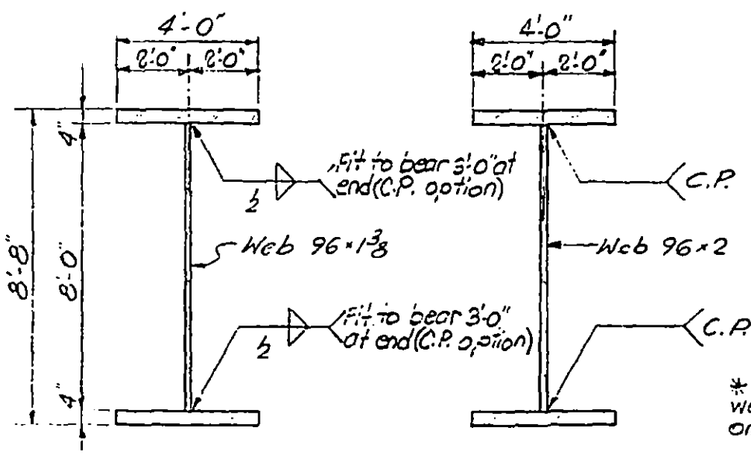

Section a-a

Section b-b

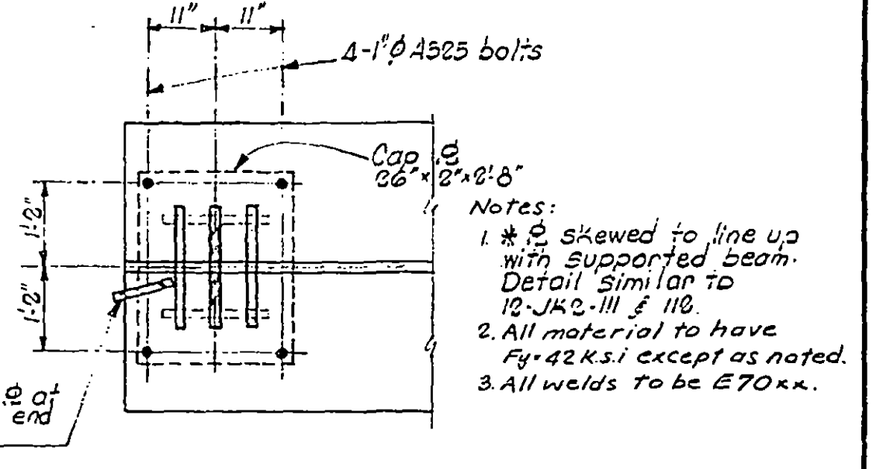

Notes:
1. * PL skewed to line up with supported beam. Detail similar to 12-JK2-111 & 118.
2. All material to have Fy=42 K.S.I except as noted.
3. All welds to be E70xx.

Section c-c

LICENSED PROFESSIONAL ENGINEER — LESLIE E. ROBERTSON — No. 34360 — UNIVERSITY OF THE STATE OF NEW YORK

DESIGNED

DRAWN J. Gricius

REVIEWED E.L.

12-JK2-170

SKILLING, HELLE, CHRISTIANSEN, ROBERTSON — Structural & Civil Engineers

PROJECT: THE WORLD TRADE CENTER | TITLE: DETAILS OF PLATE GIRDER | DATE: 3-21-69

REVISIONS

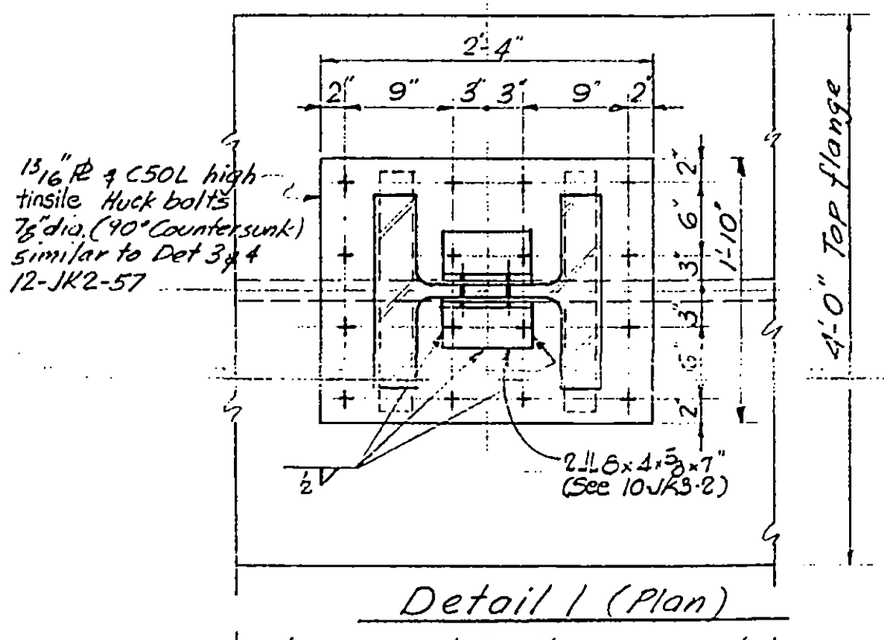

Detail 1 (Plan)

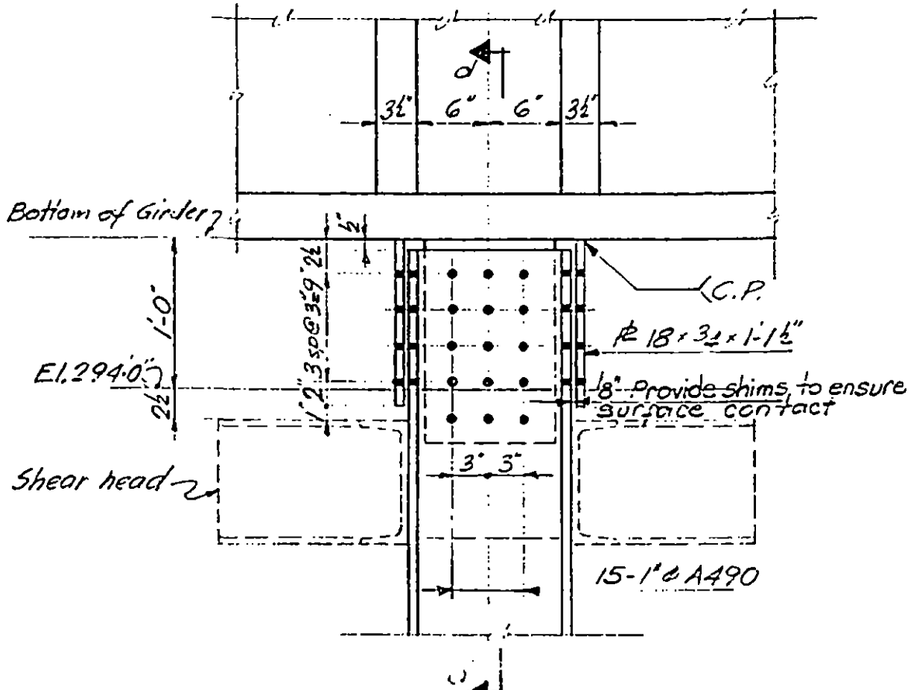

Detail 2 (Elevation)

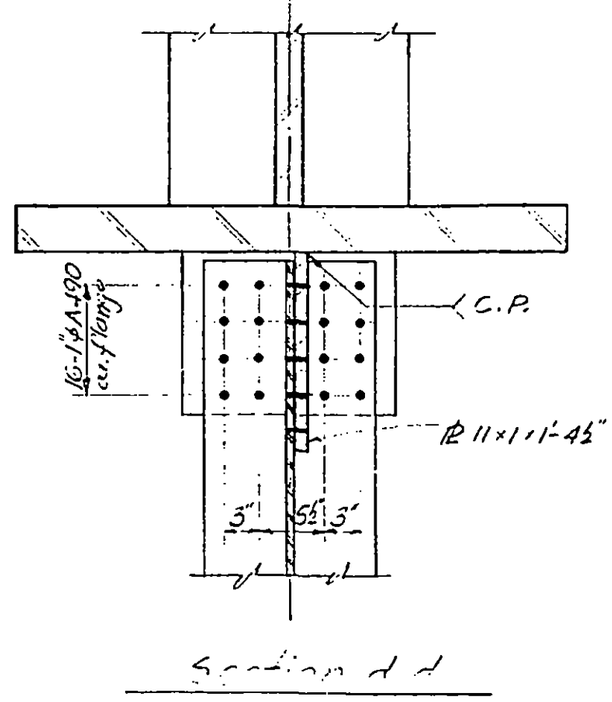

Section d-d

LICENSED PROFESSIONAL ENGINEER
LESLIE E. ROBERTSON
No 34360
UNIVERSITY OF THE STATE OF NEW YORK

DESIGNED: [illegible]
DRAWN: J. Gricius
REVIEWED: E.L.

12-JK2-171

SKILLING, HELLE, CHRISTIANSEN, ROBERTSON — Structural & Civil Engineers

PROJECT: THE WORLD TRADE CENTER | TITLE: DETAILS OF PLATE GIRDER | DATE: 3-12-69

REVISIONS: 3-21-69

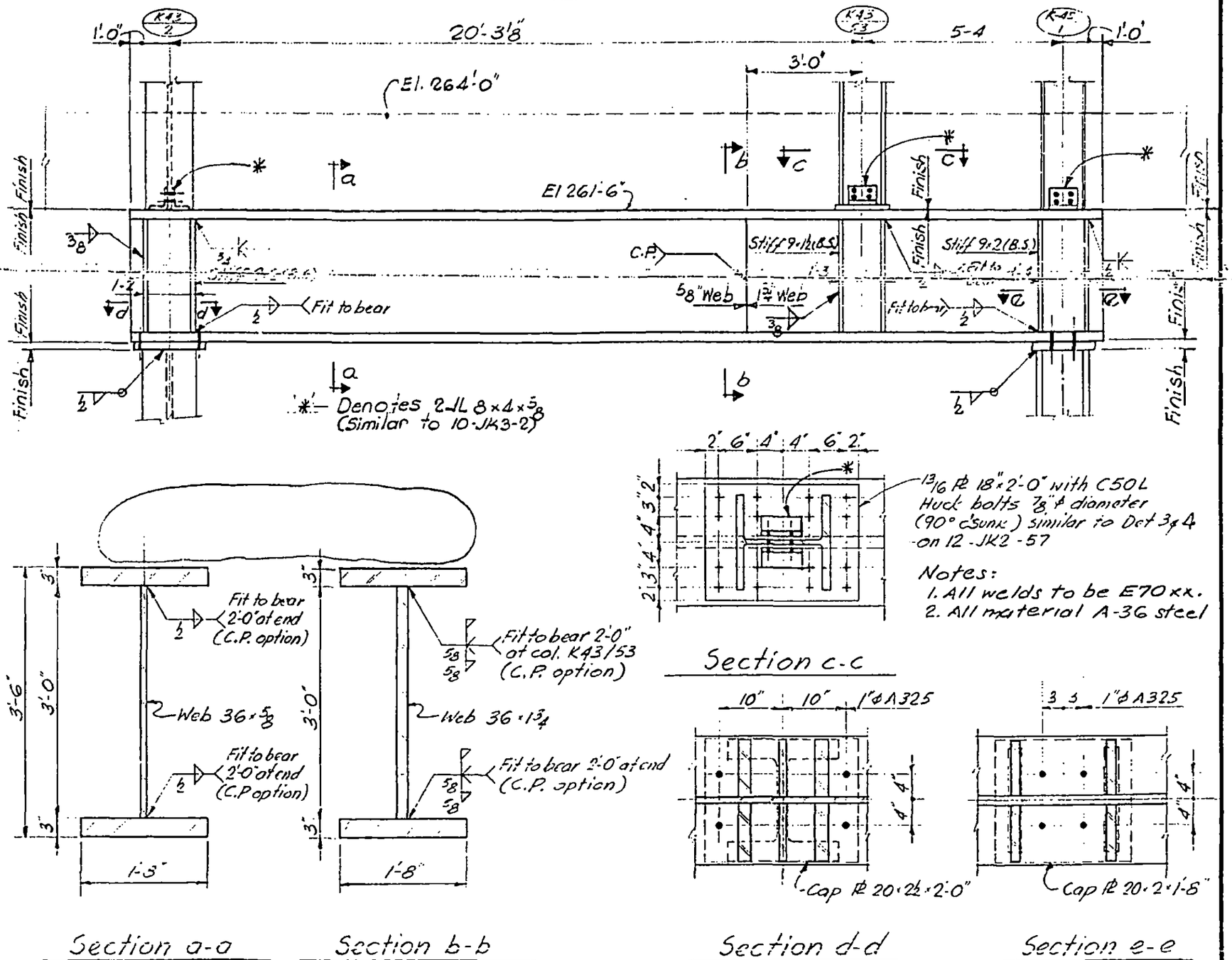

LICENSED PROFESSIONAL ENGINEER — LESLIE E. ROBERTSON — No. 34360 — UNIVERSITY OF THE STATE OF NEW YORK

DESIGNED: [illegible]

DRAWN: J. Gricius

REVIEWED: E.L.

12-JK2-172

SKILLING, HELLE, CHRISTIANSEN, ROBERTSON — Structural & Civil Engineers

PROJECT THE WORLD TRADE CENTER | TITLE DETAIL OF PLATE GIRDER | DATE 3-12-69

REVISIONS

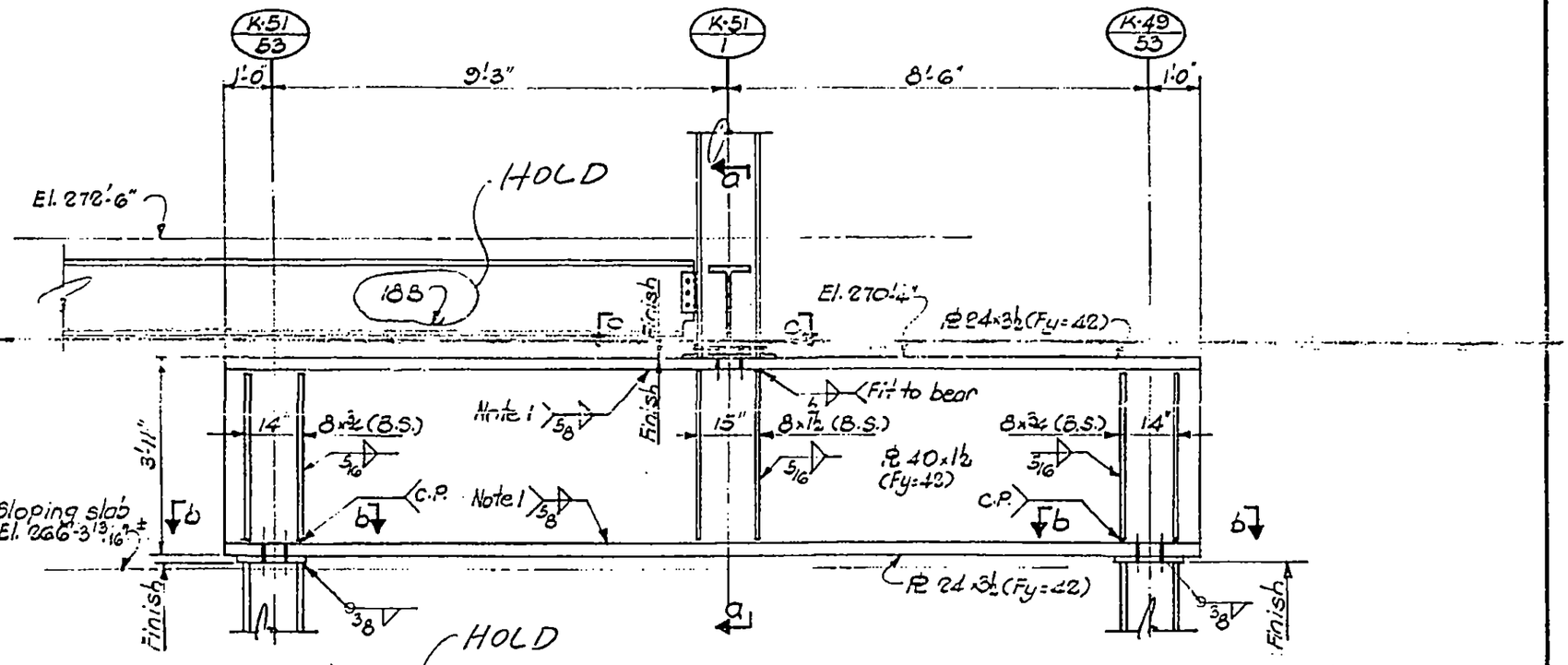

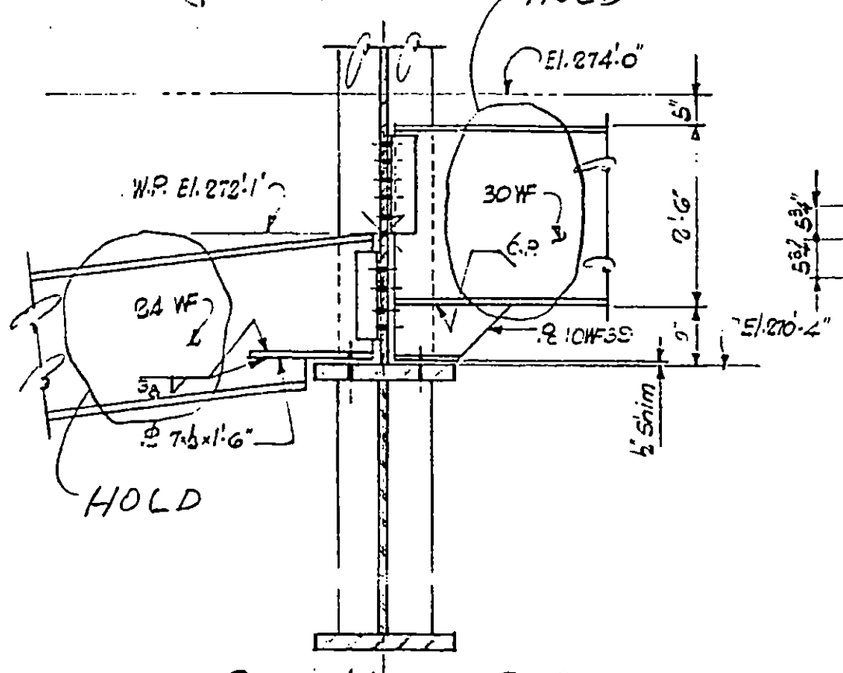

Section a-a

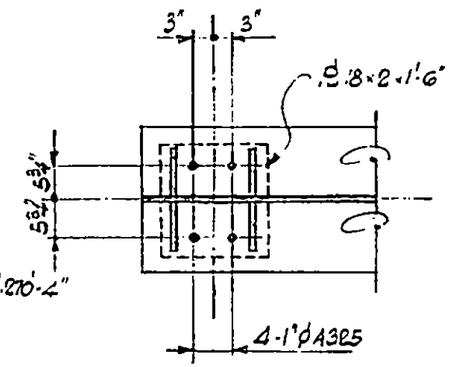

Section b-b

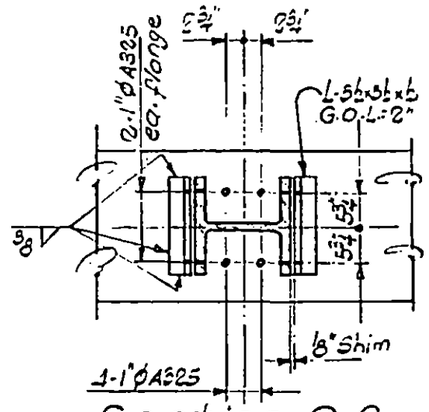

Section C-C

NOTES:

1. Fit web to bear for distance of 2'-0" at columns (loaded flange only), or C.P. weld for same distance at contractors option.
2. All welds to be E70xx.
3. All PLs to be A-36 steel, except as noted.

LICENSED PROFESSIONAL ENGINEER — LESLIE E. ROBERTSON — No. 34360 — UNIVERSITY OF THE STATE OF NEW YORK

DESIGNED J. Huffnagle.
DRAWN S.T.M.
REVIEWED E.L.

12-JK2-173

SKILLING, HELLE, CHRISTIANSEN, ROBERTSON — Structural & Civil Engineers

PROJECT THE WORLD TRADE CENTER | TITLE DETAIL OF PLATE GIRDER | DATE 3-12-69

REVISIONS

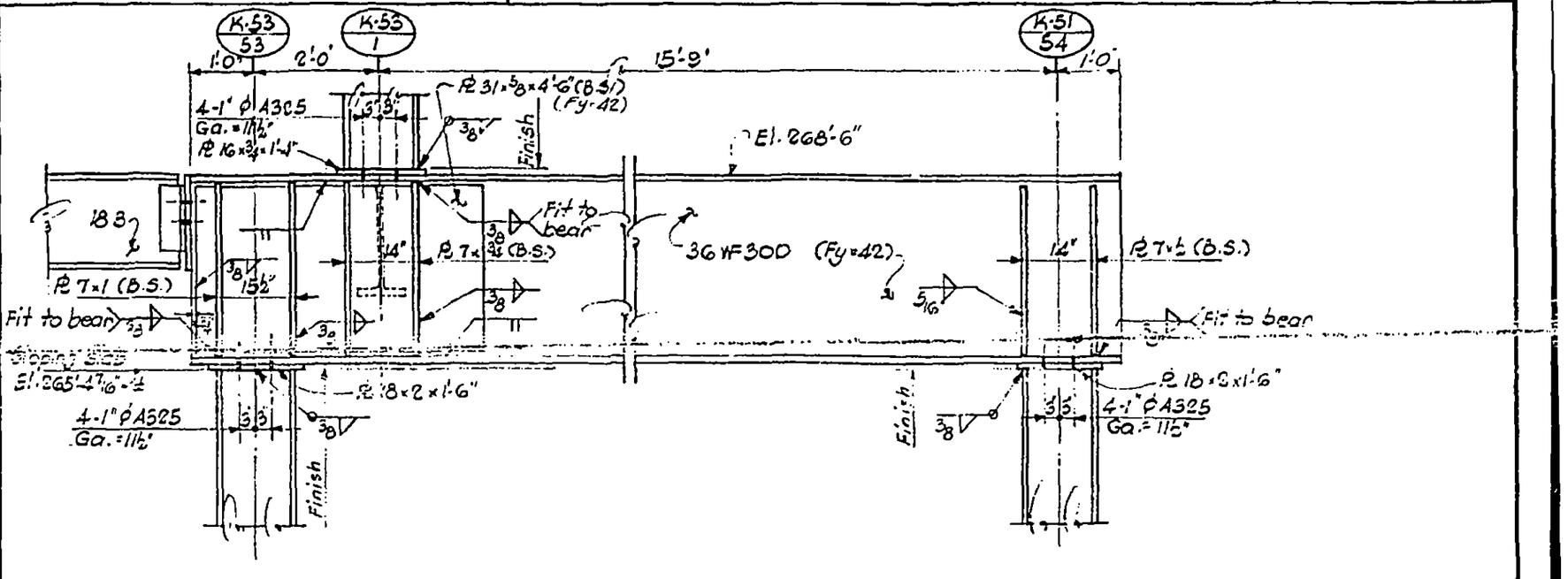

Notes:
1. All welds to be E70xx.
2. All PLs to be A-36 steel except as noted.

12-JK2-174

LICENSED PROFESSIONAL ENGINEER
LESLIE E. ROBERTSON
UNIVERSITY OF NEW YORK

DESIGNED
DRAWN S.T.M.
REVIEWED E.L.

SKILLING, HELLE, CHRISTIANSEN, ROBERTSON — Structural & Civil Engineers

PROJECT: THE WORLD TRADE CENTER | TITLE: DETAIL OF PLATE GIRDER | DATE: 3-21-69

REVISIONS

4-18-69

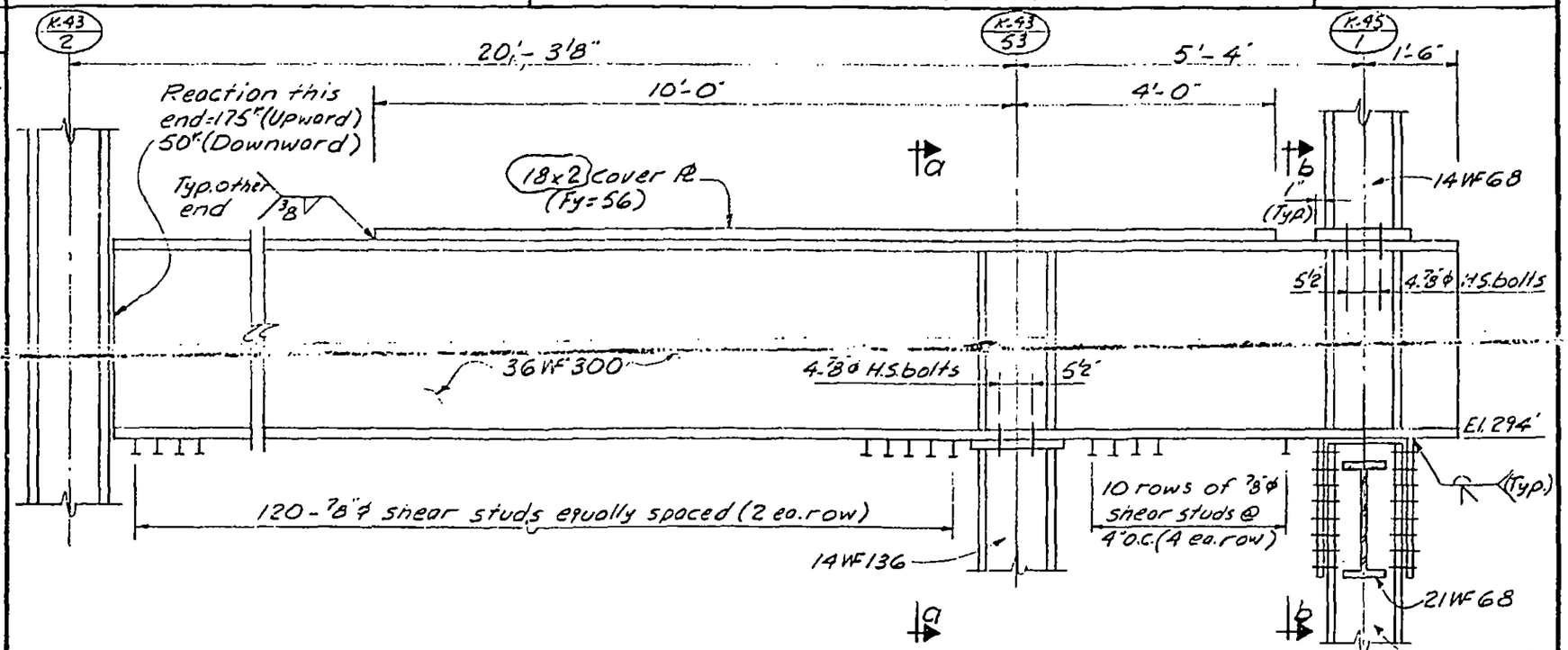

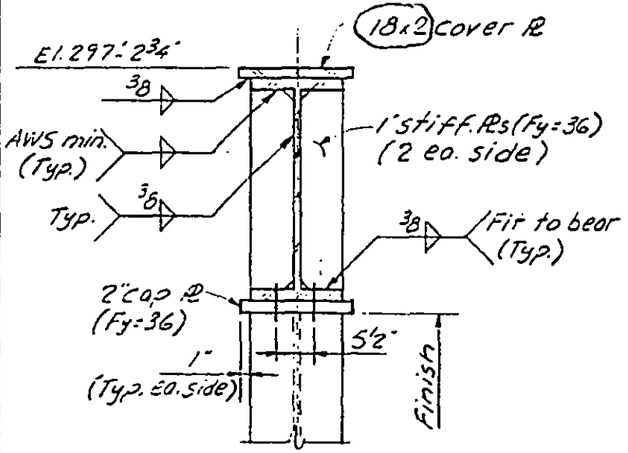

Section a-a

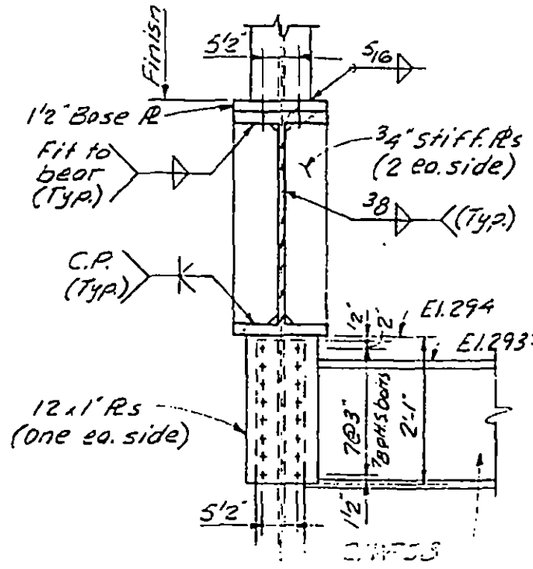

Section b-b

Notes:

1. All welds to be E70xx.
2. All bolts to be A-325 friction type H.S. bolts.
3. Column cap PL detail similar to detail 104(10-JK2-7)

LICENSED PROFESSIONAL ENGINEER — LESLIE E. ROBERTSON — No. 34360 — UNIVERSITY OF THE STATE OF NEW YORK

DESIGNED

DRAWN: A.L. FRANQUI

REVIEWED: E.L.

12-JK2-175

SKILLING, HELLE, CHRISTIANSEN, ROBERTSON — Structural & Civil Engineers

PROJECT THE WORLD TRADE CENTER | TITLE DETAILS OF PLATE GIRDER | DATE 9-17-69

REVISIONS

4-8-70

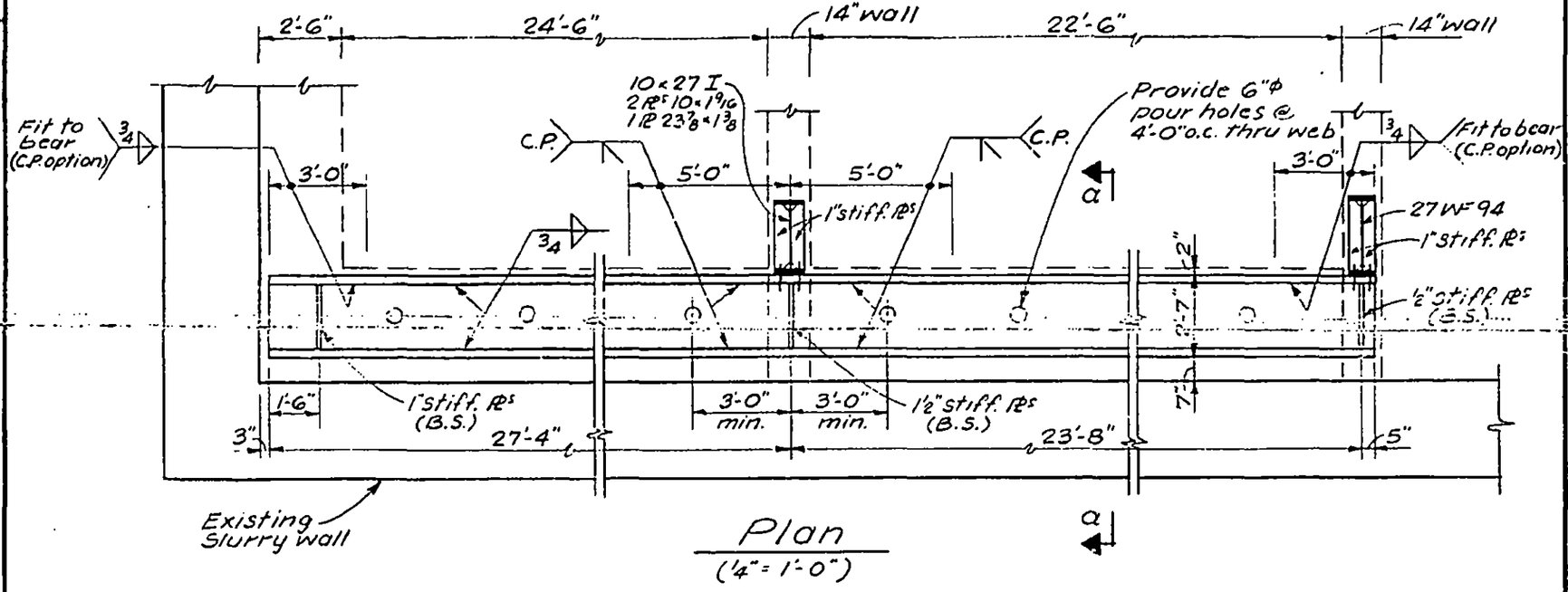

Plan

(1/4" = 1'-0")

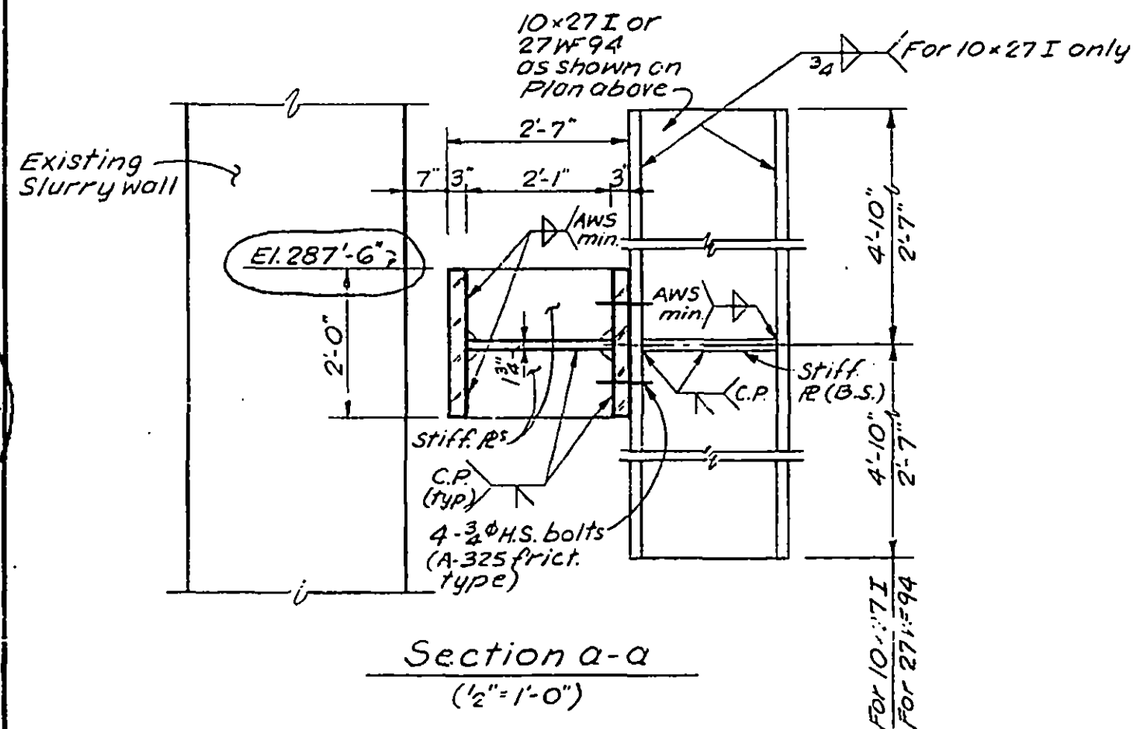

Section a-a

(1/2" = 1'-0")

Notes:

1. All material shown to have Fy = 42 ksi.
2. All welds to be E70xx

DESIGNED

DRAWN S.C.

REVIEWED E.L.

12-JK2-176

LICENSED PROFESSIONAL ENGINEER — LESLIE E. ROBERTSON — No. 34360 — UNIVERSITY OF THE STATE OF NEW YORK

SKILLING, HELLE, CHRISTIANSEN, ROBERTSON — Structural & Civil Engineers

PROJECT THE WORLD TRADE CENTER | TITLE GIRDERS EL 310 | DATE 9/15/71

REVISIONS

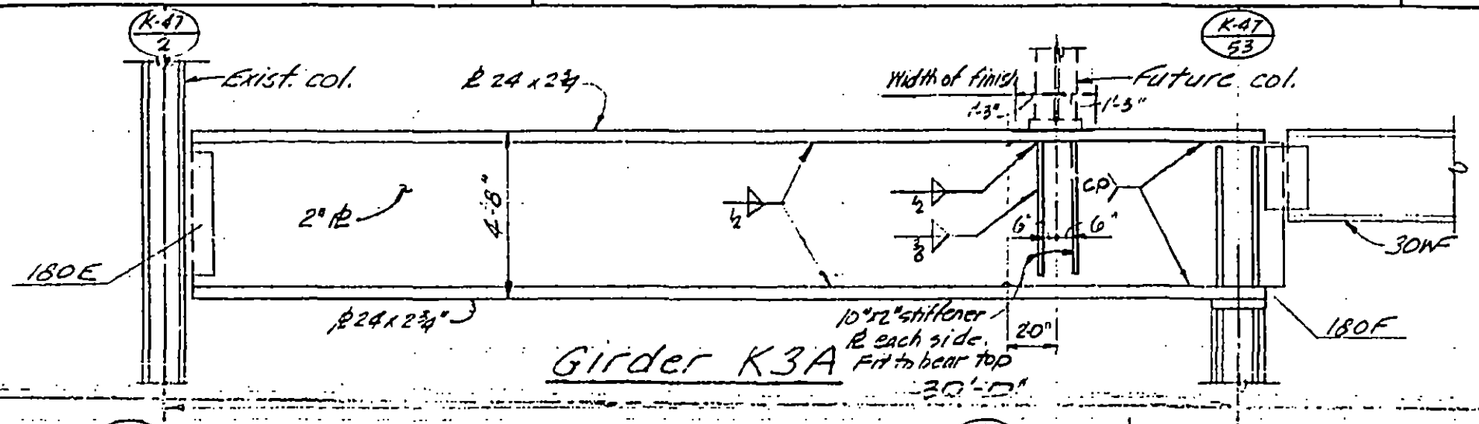

Girder K3A

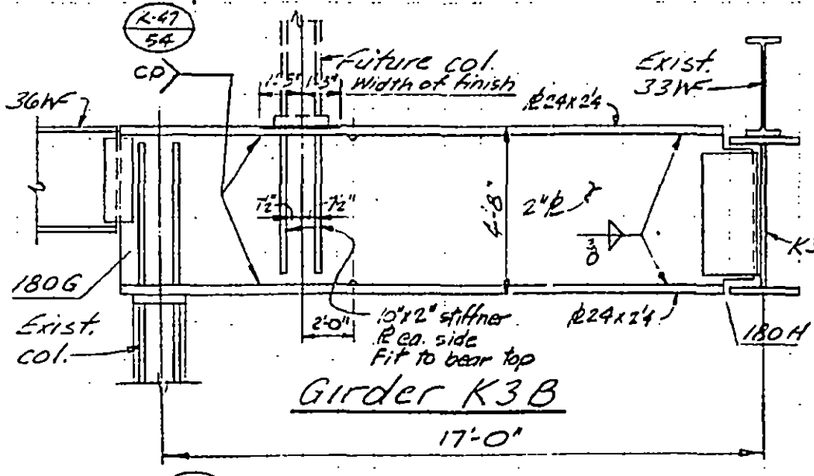

Girder K3B

17'-0"

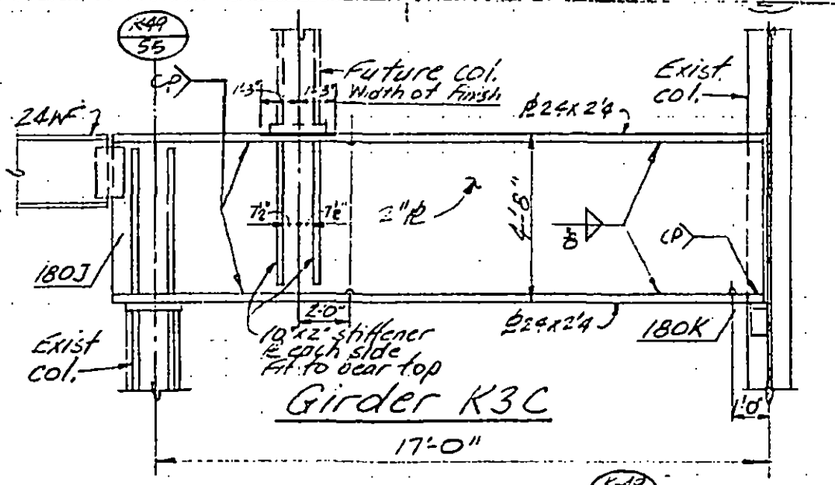

Girder K3C

17'-0"

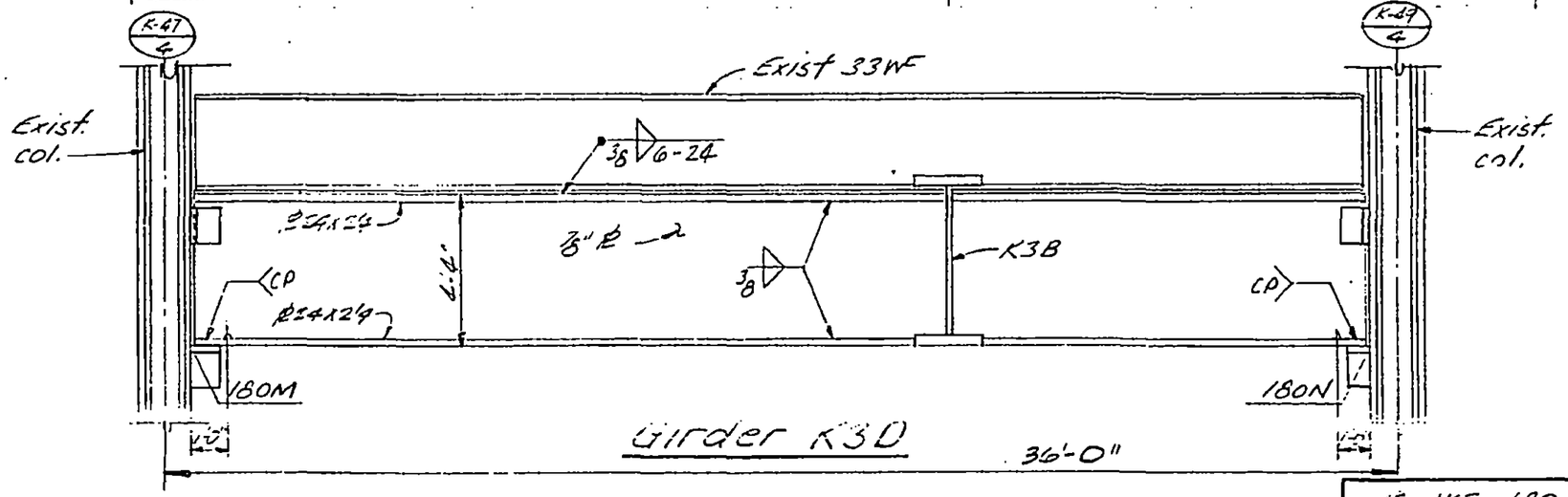

Girder K3D

36'-0"

LICENSED PROFESSIONAL ENGINEER — LESLIE E. ROBERTSON — No 34360 — UNIVERSITY OF THE STATE OF NEW YORK

DESIGNED

DRAWN

REVIEWED

12-JKZ-180.1

SKILLING, HELLE, CHRISTIANSEN, ROBERTSON — Structural & Civil Engineers

PROJECT THE WORLD TRADE CENTER | TITLE GIRDER DETAILS ELEVATION 310 | DATE 9-15-71

REVISIONS

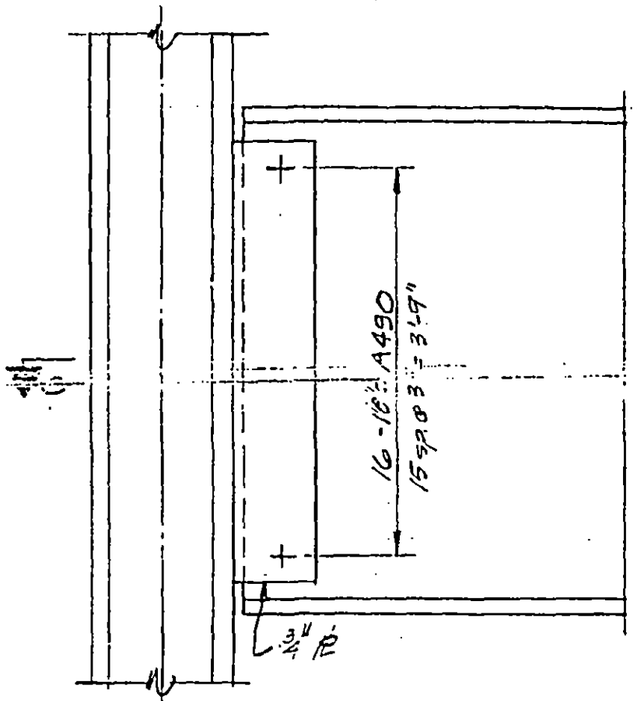

Detail 180 E

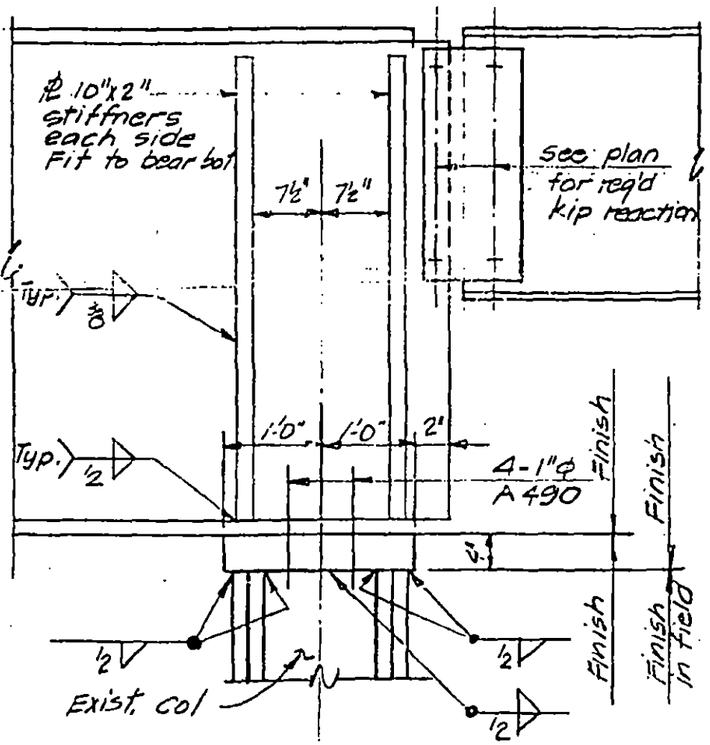

Detail 180F

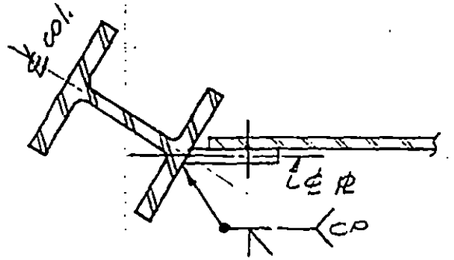

Section e-e

LICENSED PROFESSIONAL ENGINEER — LESLIE E. ROBERTSON — No 34360 — UNIVERSITY OF THE STATE OF NEW YORK

DESIGNED

DRAWN

REVIEWED

12-JK2-180.2

SKILLING, HELLE, CHRISTIANSEN, ROBERTSON — Structural & Civil Engineers

PROJECT THE WORLD TRADE CENTER | TITLE GIRDER DETAILS ELEVATION 310 | DATE 9-15-71

REVISIONS

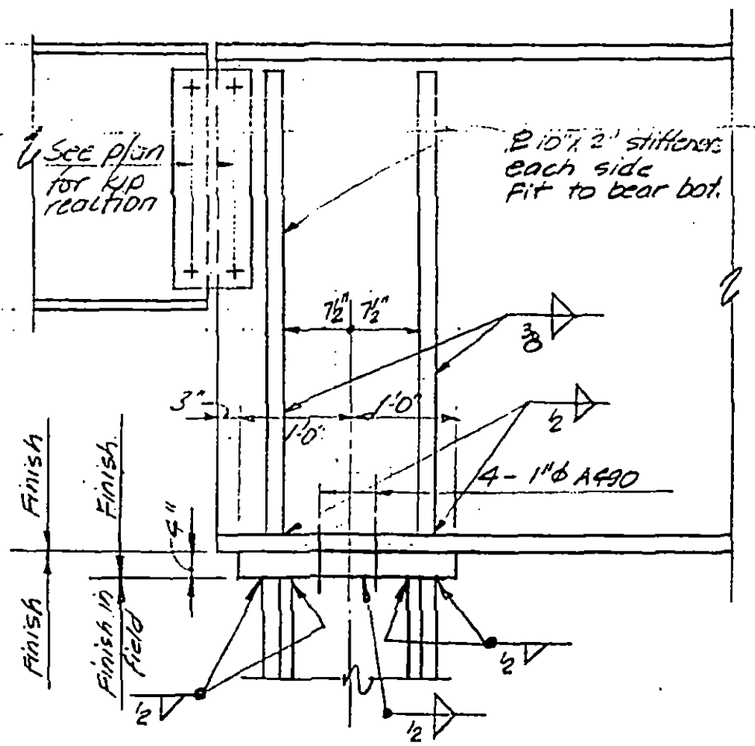

Detail 180 G
Detail 180 J

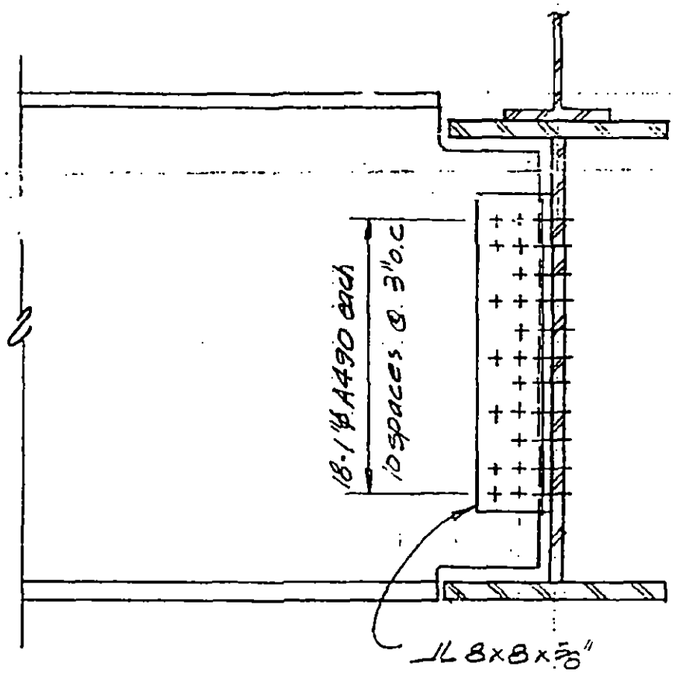

Detail 180 H

LICENSED PROFESSIONAL ENGINEER
LESLIE E. ROBERTSON
No 34360
UNIVERSITY OF THE STATE OF NEW YORK

DESIGNED
DRAWN
REVIEWED

12-JK2-180.3

SKILLING, HELLE, CHRISTIANSEN, ROBERTSON — Structural & Civil Engineers

PROJECT: THE WORLD TRADE CENTER | TITLE: GIRDER DETAILS EL 310 | DATE: 9-15-71

REVISIONS

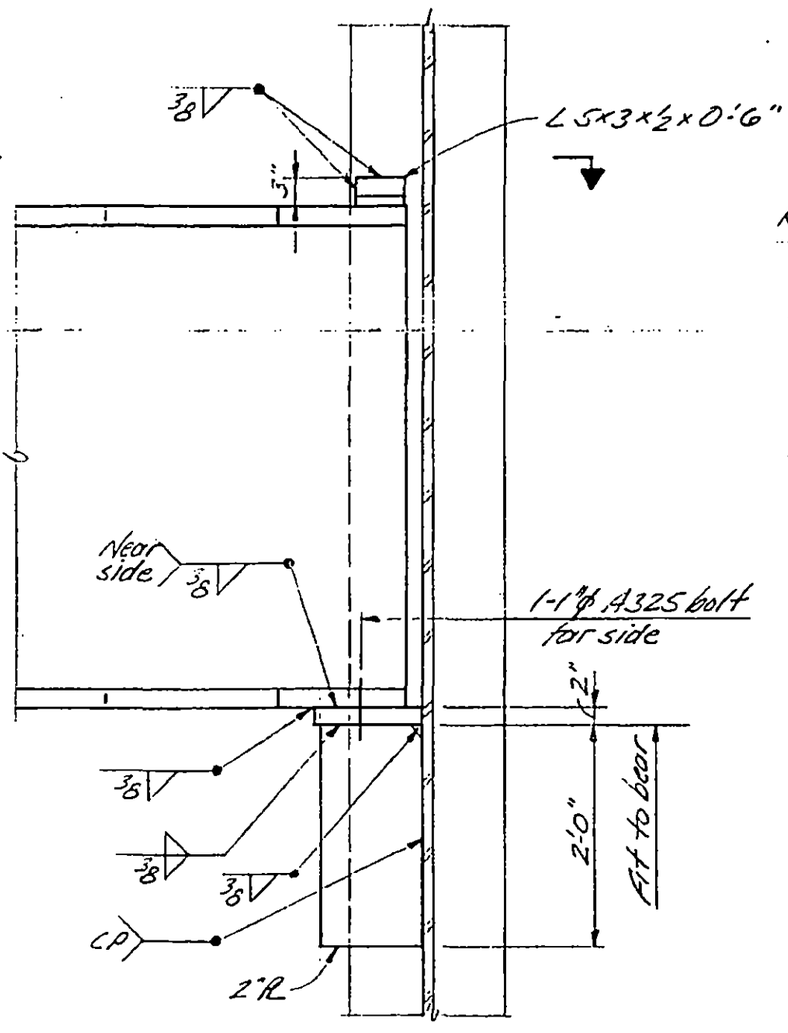

180K

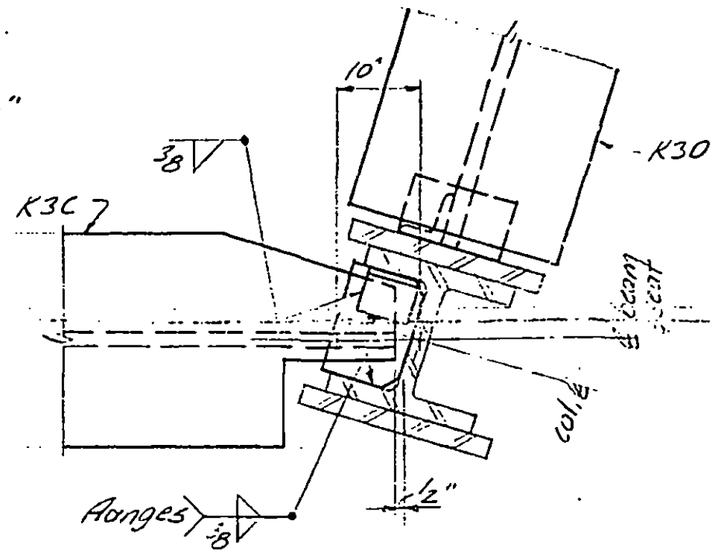

180 K℄N

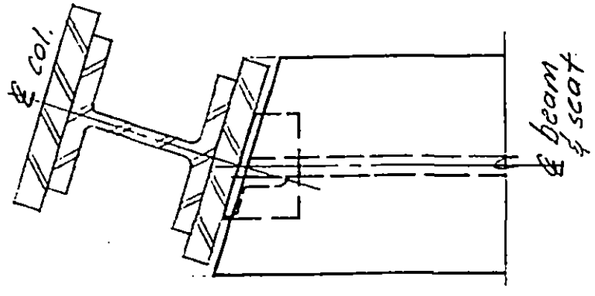

180 M

LICENSED PROFESSIONAL ENGINEER — LESLIE E. ROBERTSON — No 34360 — UNIVERSITY OF THE STATE OF NEW YORK

DESIGNED

DRAWN J. Adams

REVIEWED

12-JK2-180.4

SKILLING, HELLE, CHRISTIANSEN, ROBERTSON — Structural & Civil Engineers

PROJECT: THE WORLD TRADE CENTER | TITLE: GIRDER DETAILS - EL 310 | DATE: 9-15-71

REVISIONS

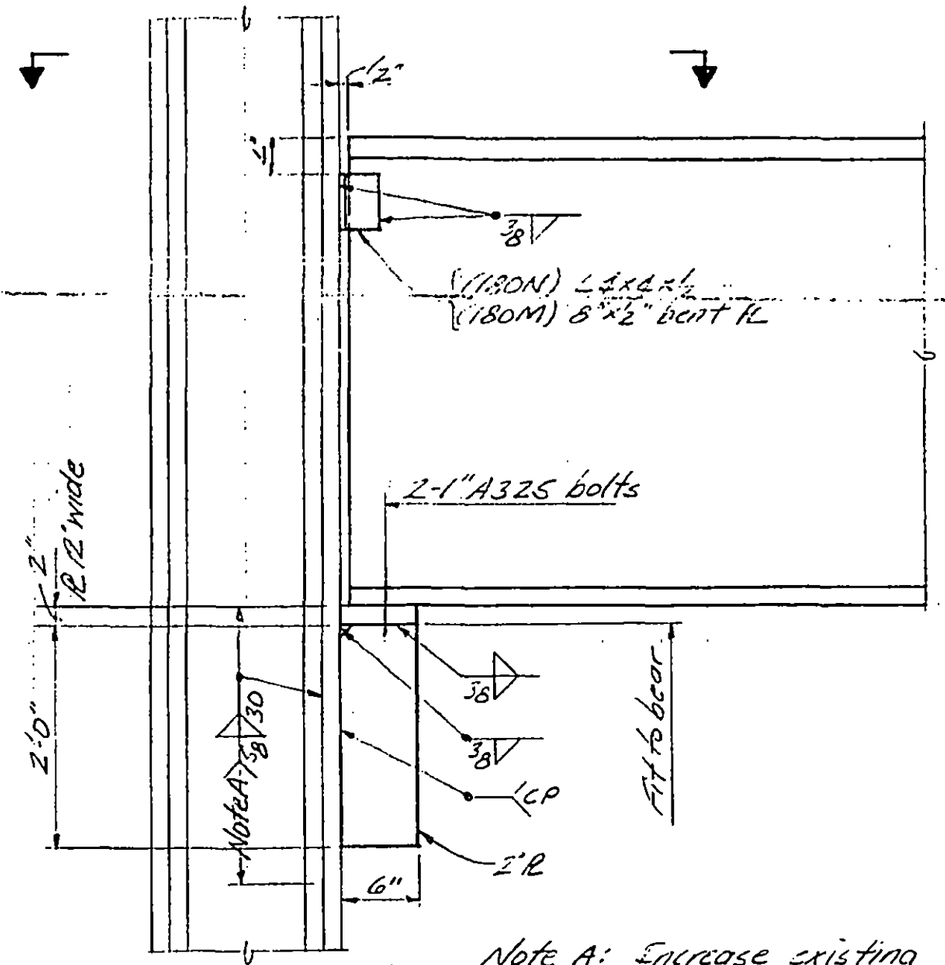

Note A: Increase existing weld to size shown.

180M
180N

LICENSED PROFESSIONAL ENGINEER — LESLIE E. ROBERTSON — No 34380 — UNIVERSITY OF THE STATE OF NEW YORK

DESIGNED

DRAWN

REVIEWED

12-JK2-180.5

SKILLING, HELLE, CHRISTIANSEN, ROBERTSON — Structural & Civil Engineers

PROJECT: THE WORLD TRADE CENTER | TITLE: NEW GIRDERS K3E & K3F - EL. 294 | DATE: 1-15-72

REVISIONS

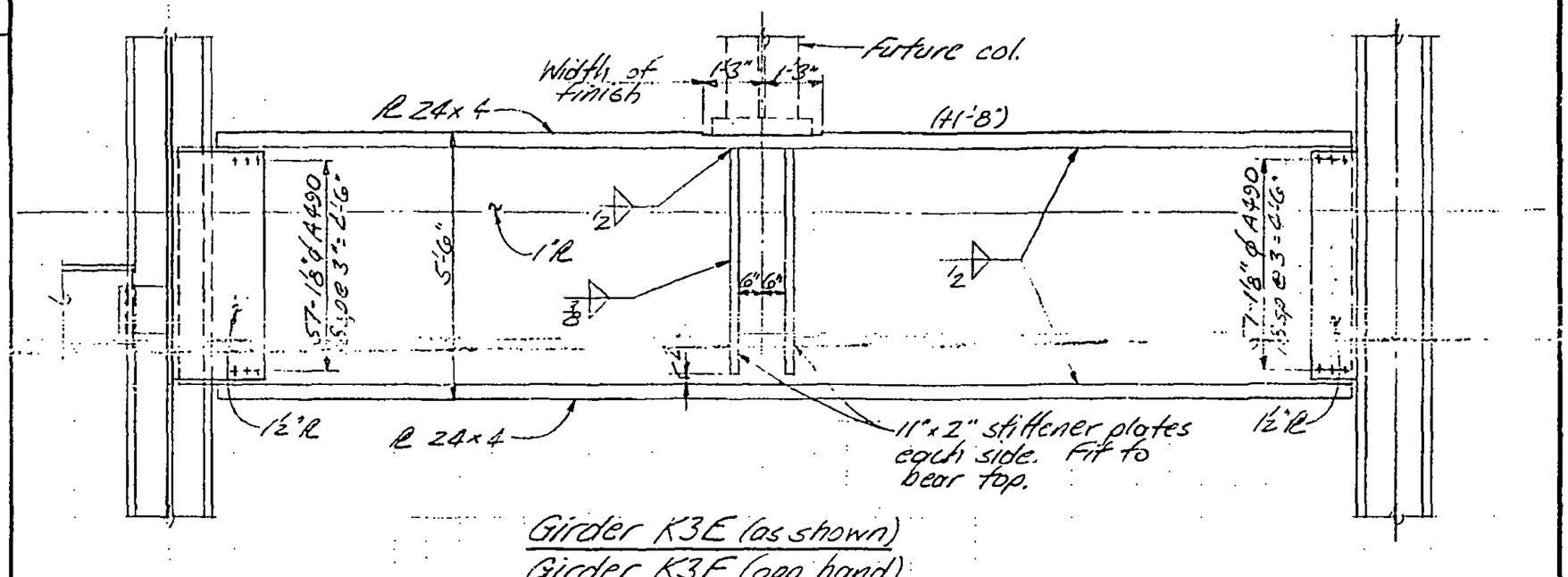

Girder K3E (as shown)
Girder K3F (opp. hand)

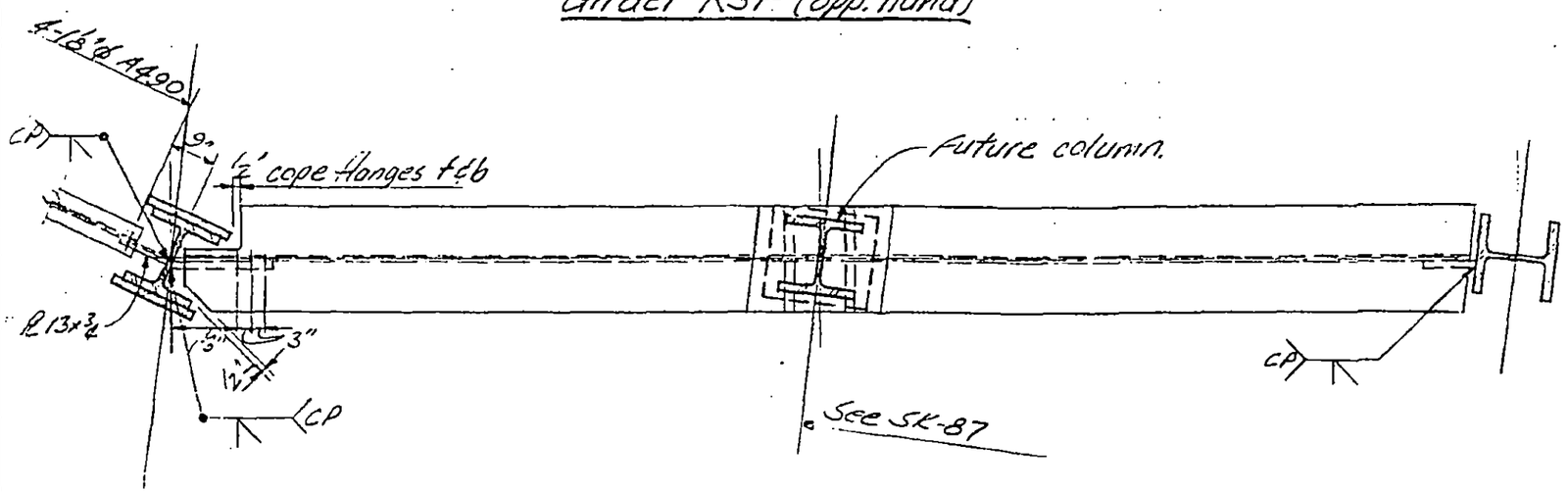

Plan

LICENSED PROFESSIONAL ENGINEER — LESLIE E. ROBERTSON — No 34360 — UNIVERSITY OF THE STATE OF NEW YORK

DESIGNED

DRAWN

REVIEWED W Brewer

12-JK2-180.6

SKILLING, HELLE, CHRISTIANSEN, ROBERTSON — Structural & Civil Engineers

PROJECT: THE WORLD TRADE CENTER | TITLE: GIRDER DETAILS - EL 332 | DATE: 1-15-72

REVISIONS

1/25/72

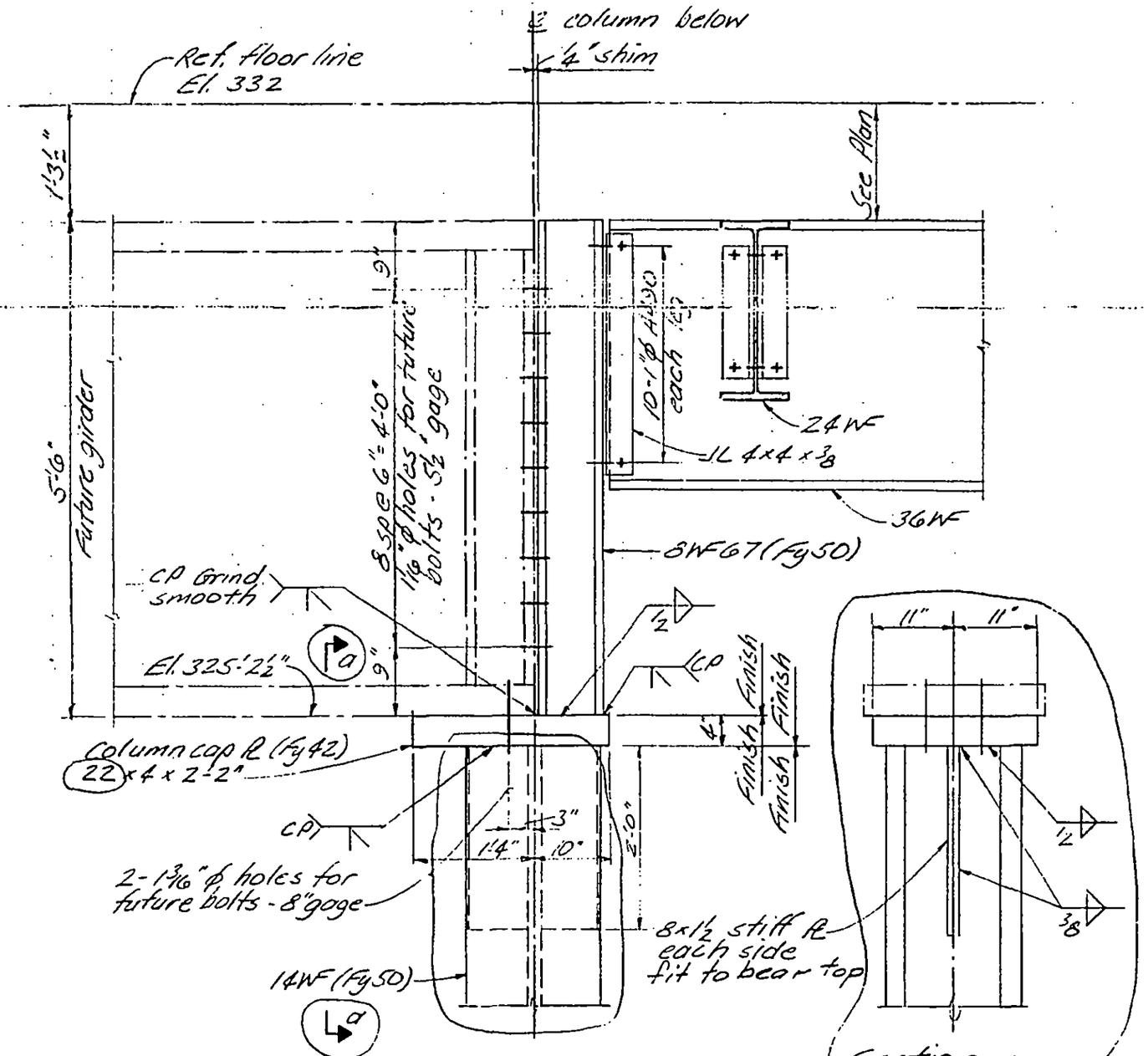

LICENSED PROFESSIONAL ENGINEER — LESLIE E. ROBERTSON — No 34360 — UNIVERSITY OF THE STATE OF NEW YORK

DESIGNED

DRAWN: J Adams

REVIEWED: W Brewer

12-JK2-181

SKILLING, HELLE, CHRISTIANSEN, ROBERTSON — Structural & Civil Engineers

PROJECT THE WORLD TRADE CENTER | TITLE DETAILS - EL 332 | DATE 4-7-72

REVISIONS

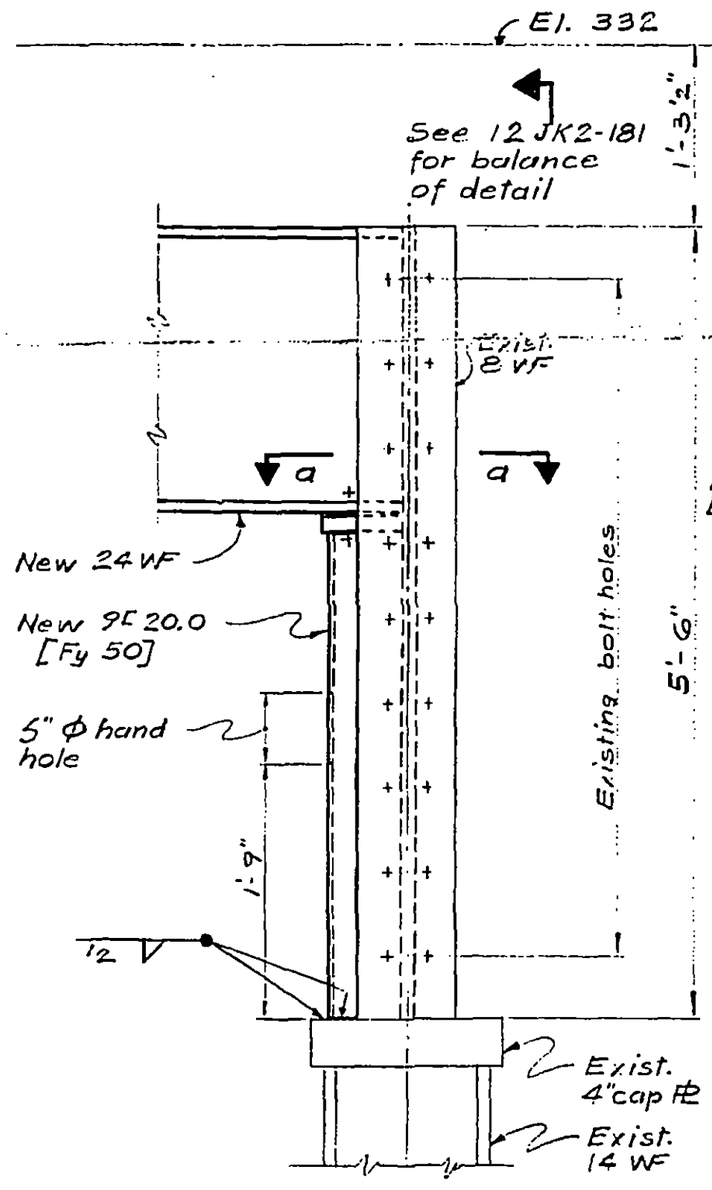

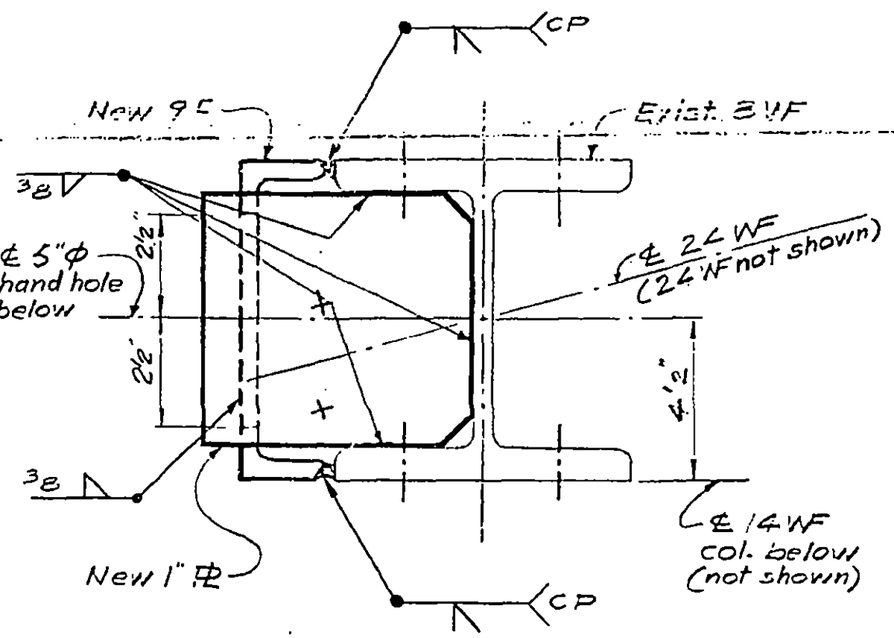

Section a-a

LICENSED PROFESSIONAL ENGINEER — LESLIE E. ROBERTSON — No 34360 — UNIVERSITY OF THE STATE OF NEW YORK

DESIGNED

DRAWN H.A.W.

REVIEWED

12-JK2-182

SKILLING, HELLE, CHRISTIANSEN, ROBERTSON — Structural & Civil Engineers

PROJECT: THE WORLD TRADE CENTER | TITLE: BEAM CONNECTION DETAIL | DATE: 4-7-72

REVISIONS

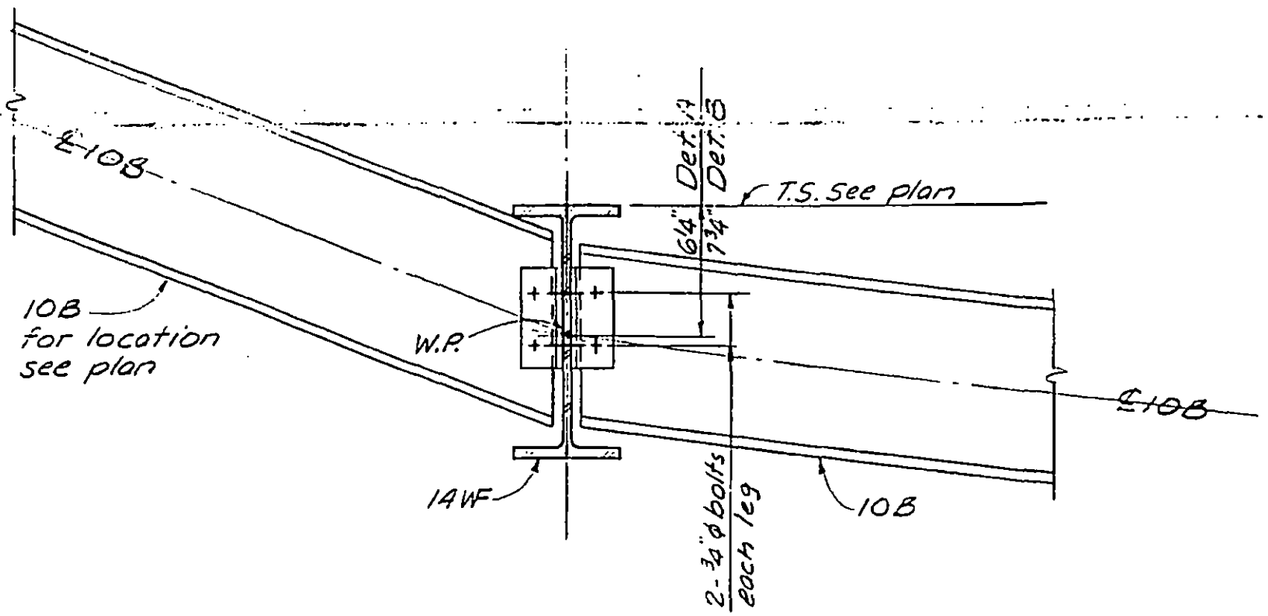

LICENSED PROFESSIONAL ENGINEER
LESLIE E. ROBERTSON
NO 34360
UNIVERSITY OF THE STATE OF NEW YORK

DESIGNED

DRAWN
A. Franyui

REVIEWED

12-JK2-183

SKILLING, HELLE, CHRISTIANSEN, ROBERTSON — Structural & Civil Engineers

PROJECT: THE WORLD TRADE CENTER | TITLE: CONNECTION DETAIL - EL. 332 | DATE: 6-9-72

REVISIONS

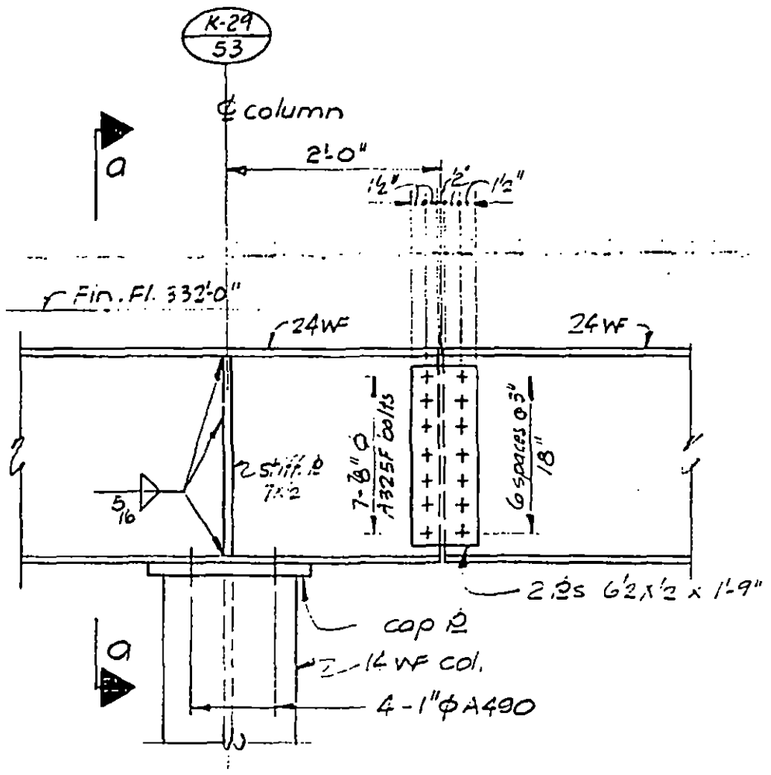

Detail A

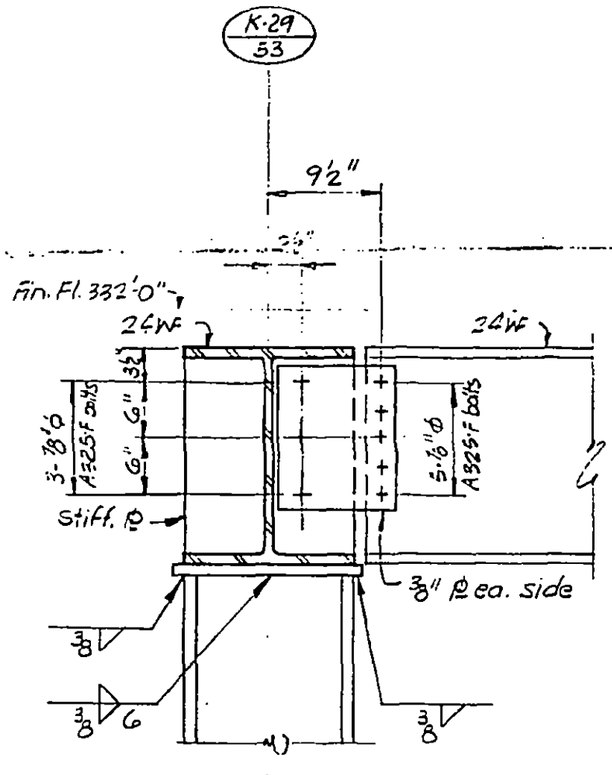

Section a-a

LICENSED PROFESSIONAL ENGINEER
LESLIE E. ROBERTSON
No 34360
UNIVERSITY OF THE STATE OF NEW YORK

DESIGNED: MR

DRAWN: [signature]

REVIEWED

12-JK2-184

SKILLING, HELLE, CHRISTIANSEN, ROBERTSON — Structural & Civil Engineers

PROJECT: THE WORLD TRADE CENTER | TITLE: DETAIL FOR "NOTCHING" BEAM ALREADY IN PLACE | DATE: 1-23-69

(Per PNYA Change Order 433.013)

REVISIONS

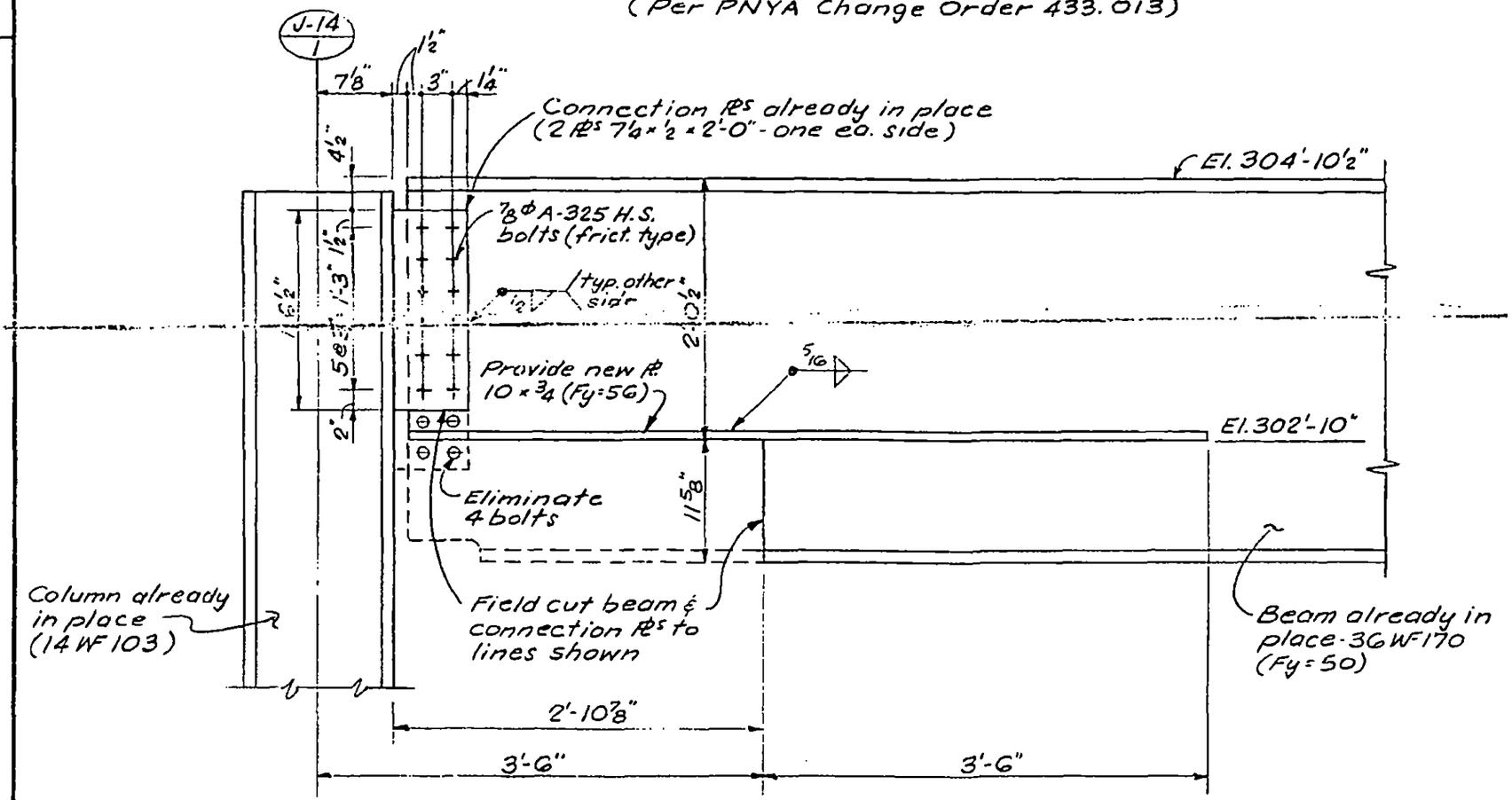

Location of beam — Zone J-3
(street level) East of column J14-1
as shown on Dwg. SJ-93

Notes:

1. All field work to be carried out under contract WTC-230.00 and to be completed before any concreting work in this area.
2. All welds to be E70xx.

LICENSED PROFESSIONAL ENGINEER — LESLIE E. ROBERTSON — No. 34360 — UNIVERSITY OF THE STATE OF NEW YORK

DESIGNED

DRAWN S.C.

REVIEWED E.L.

12-JK2-199

SKILLING, HELLE, CHRISTIANSEN, ROBERTSON — Structural & Civil Engineers

PROJECT THE WORLD TRADE CENTER | TITLE CONSTRUCTION JOINT DETAIL | DATE 12-3-68

REVISIONS

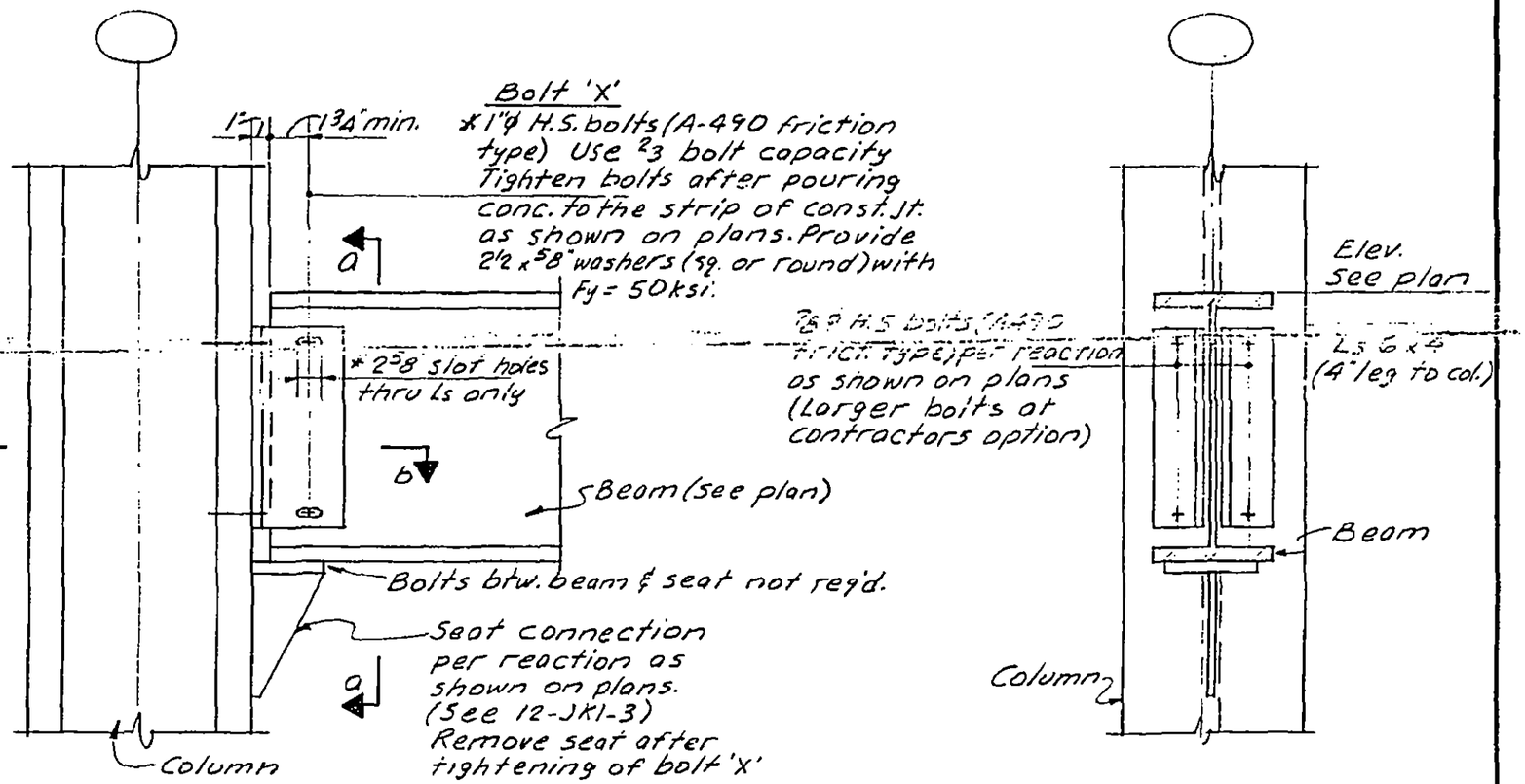

Note:
1. * — For cols. J7-3 thru 5 use 1⅛"ϕ bolts with 2¾" slot holes.

LICENSED PROFESSIONAL ENGINEER — LESLIE E. ROBERTSON — No. 34360 — UNIVERSITY OF THE STATE OF NEW YORK

DESIGNED

DRAWN

REVIEWED

12-JK3-2

SKILLING, HELLE, CHRISTIANSEN, ROBERTSON — Structural & Civil Engineers

PROJECT THE WORLD TRADE CENTER | TITLE CONSTRUCTION JOINT DETAIL | DATE 12-3-68

REVISIONS

1-3-69

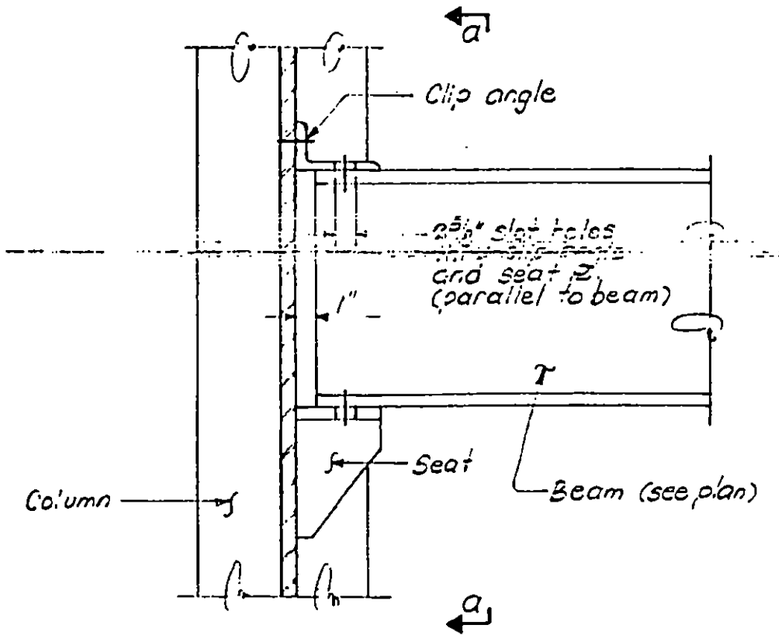

ELEVATION

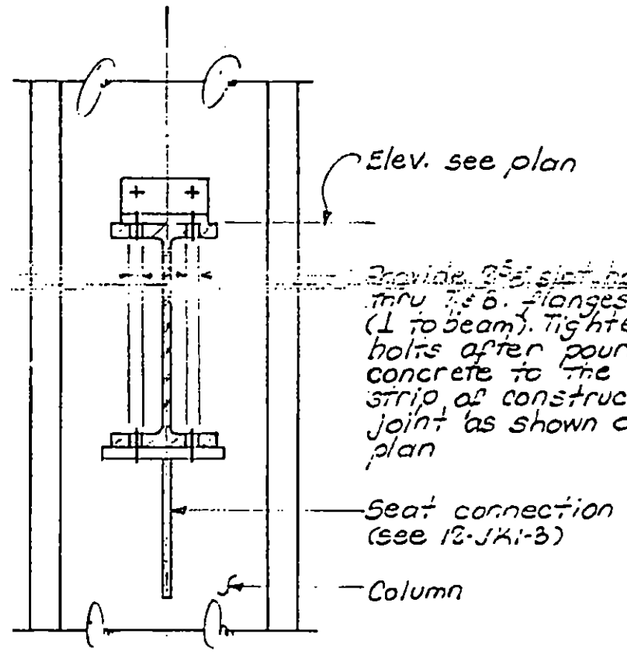

Section a-a

FOR BEAMS WITH FLANGES LARGER THAN 10"

(For beam flanges less than 10", see 12-JK3-4)

Notes:

1. Provide washers 2½x5/16 (square or round) with Fy=50 ksi for all bolts over slot holes
2. Where seat interferes with bosom Rs, these Rs may be eliminated.

LICENSED PROFESSIONAL ENGINEER LESLIE E. ROBERTSON No. 34360 UNIVERSITY OF THE STATE OF NEW YORK

DESIGNED

DRAWN S.C.

REVIEWED E.L.

12-JK3-3

SKILLING, HELLE, CHRISTIANSEN, ROBERTSON — Structural & Civil Engineers

PROJECT THE WORLD TRADE CENTER | TITLE CONSTRUCTION JOINT DETAIL | DATE 12-3-68

REVISIONS

1-3-69

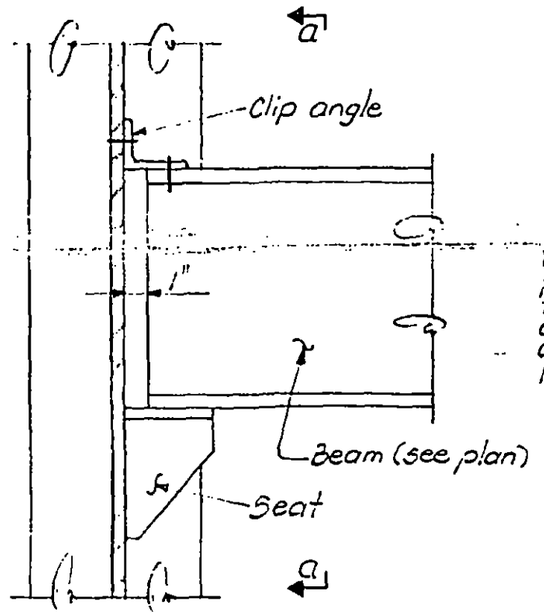

ELEVATION

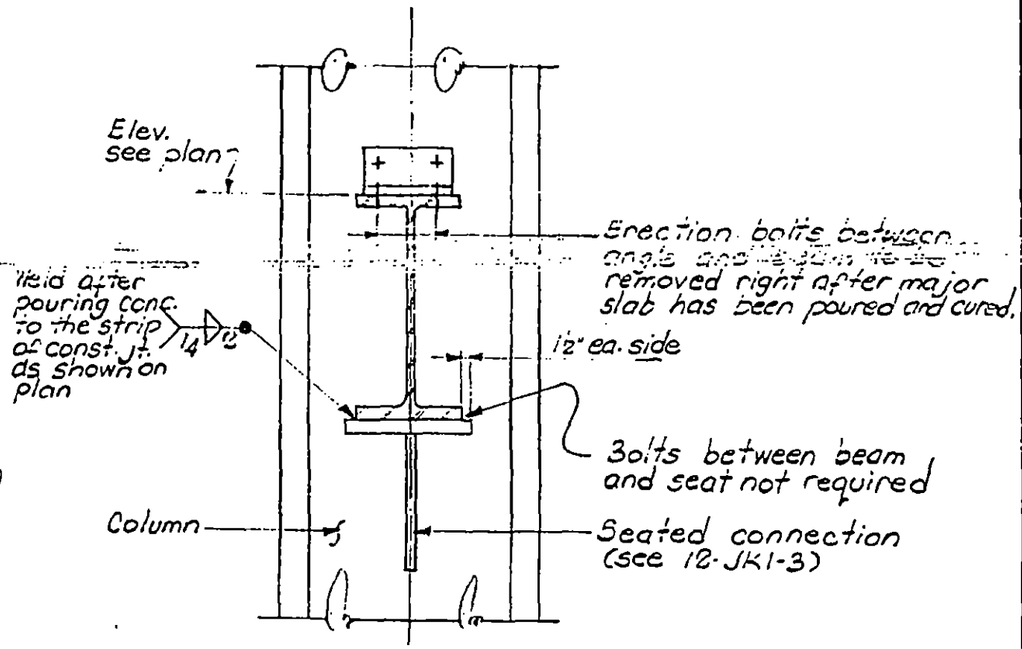

Section a-a

FOR BEAMS WITH FLANGES LESS THAN 10"
(For beam flanges greater than 10", see 12-JK3-3)

Note:
1. Where seat interferes with bosom Rs, these Rs may be eliminated.

LICENSED PROFESSIONAL ENGINEER
LESLIE E. ROBERTSON
No. 34360
UNIVERSITY OF THE STATE OF NEW YORK

DESIGNED

DRAWN S.C.

REVIEWED E.L.

12-JK3-4

SKILLING, HELLE, CHRISTIANSEN, ROBERTSON — Structural & Civil Engineers

PROJECT: THE WORLD TRADE CENTER | TITLE: CONSTRUCTION JOINT DETAIL | DATE: 12-3-68

REVISIONS: 1-3-69

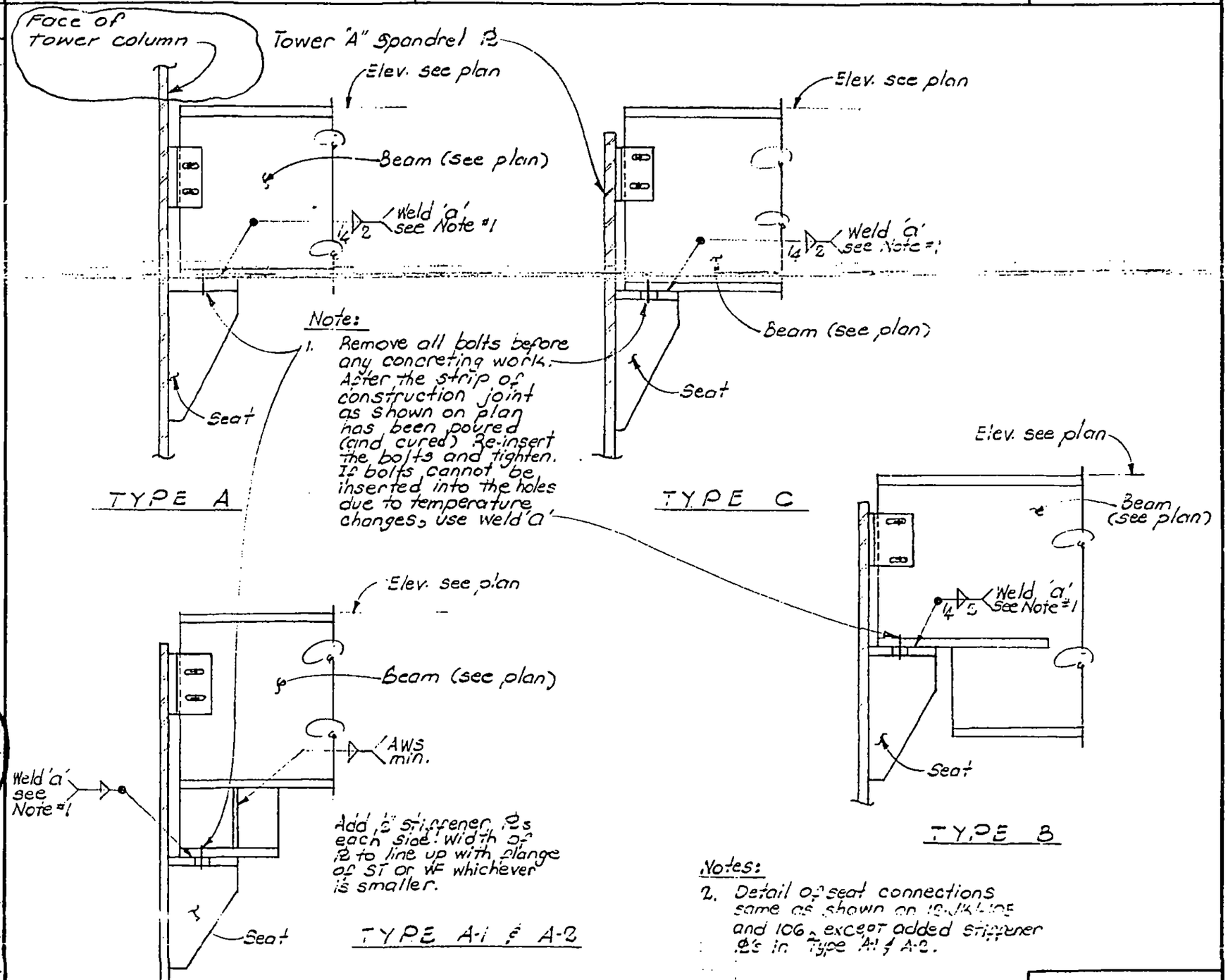

Note:

1. Remove all bolts before any concreting work. After the strip of construction joint as shown on plan has been poured (and cured) Re-insert the bolts and tighten. If bolts cannot be inserted into the holes due to temperature changes, use weld 'a'

Add 1/2" stiffener PLs each side: width of PL to line up with flange of ST or WF whichever is smaller.

Notes:

2. Detail of seat connections same as shown on 12-JK1-105 and 106, except added stiffener PLs in Type A-1 & A-2.

LICENSED PROFESSIONAL ENGINEER — LESLIE E. ROBERTSON — No. 34360 — UNIVERSITY OF THE STATE OF NEW YORK

DESIGNED

DRAWN: S.C.

REVIEWED: E.L.

12-JK3-5

SKILLING, HELLE, CHRISTIANSEN, ROBERTSON — Structural & Civil Engineers

PROJECT THE WORLD TRADE CENTER | TITLE CONSTRUCTION JOINT DETAIL | DATE 12-3-68

REVISIONS

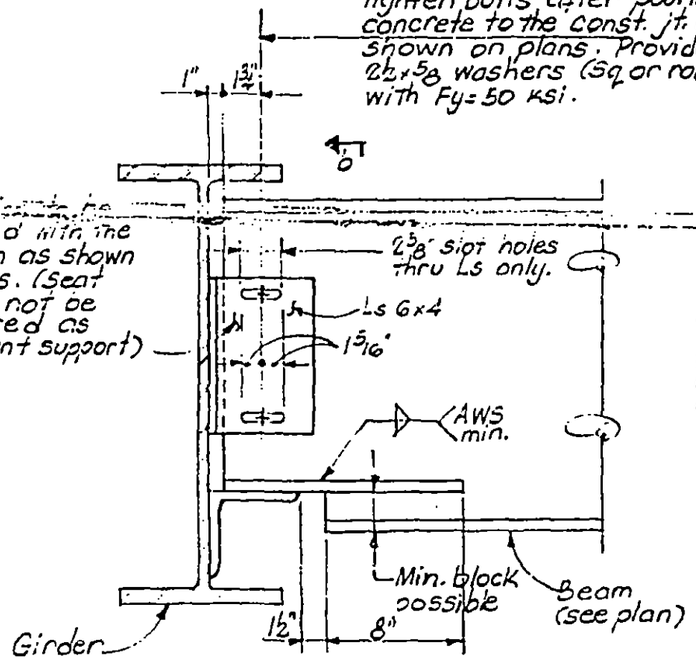

Section a-a

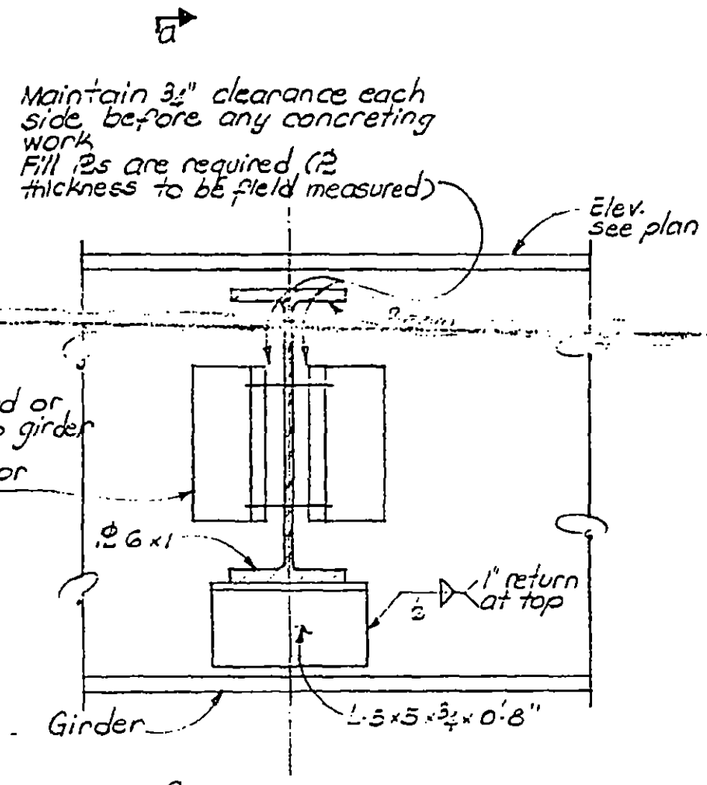

Section b-b

LICENSED PROFESSIONAL ENGINEER
LESLIE E. ROBERTSON
No. 34360
UNIVERSITY OF THE STATE OF NEW YORK

DRAWN

REVIEWED

12-JK3-G

SKILLING, HELLE, CHRISTIANSEN, ROBERTSON — Structural & Civil Engineers

PROJECT THE WORLD TRADE CENTER | TITLE CONSTRUCTION JOINT DETAIL | DATE 12-3-68

REVISIONS

1-3-69

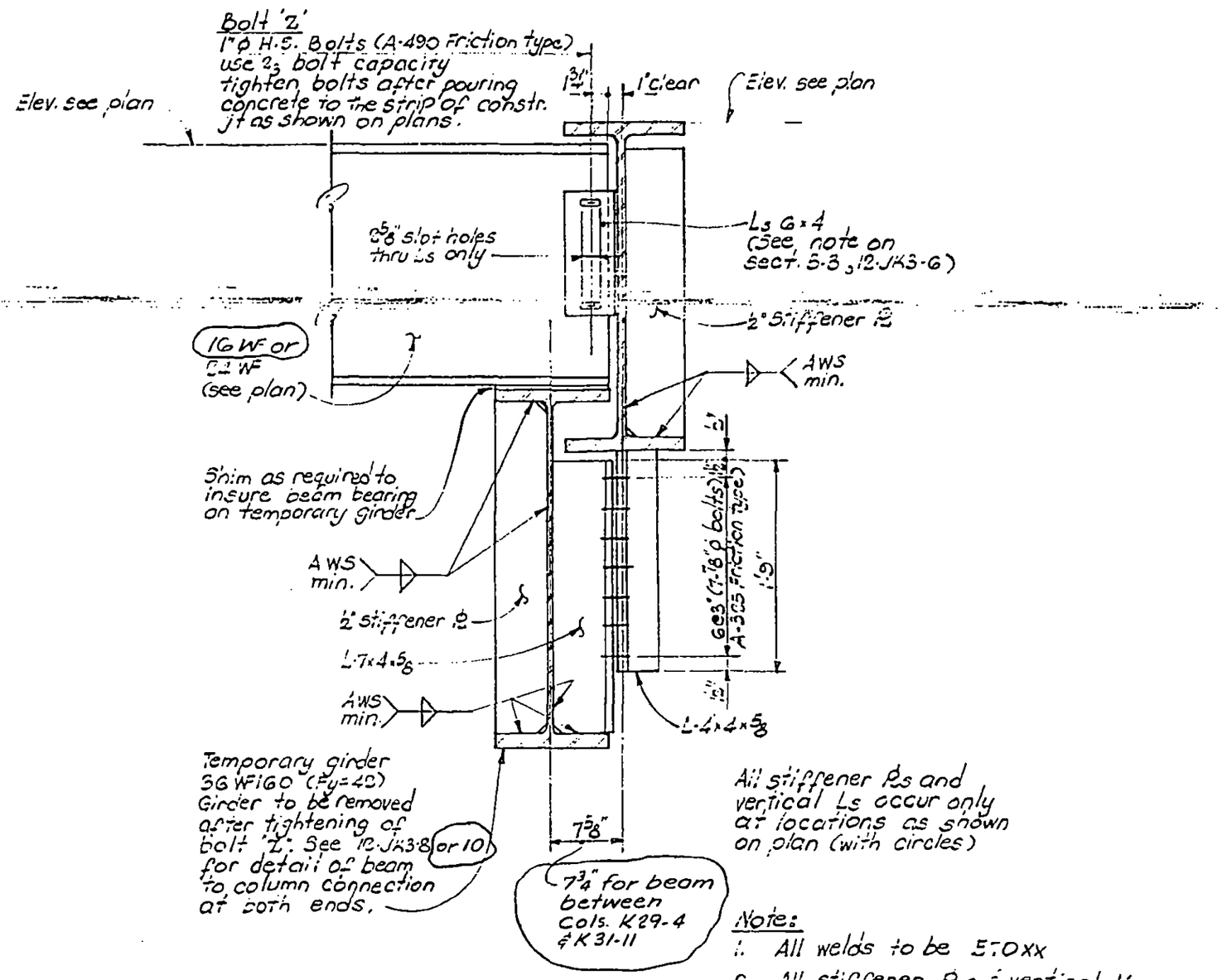

All stiffener PS and vertical Ls occur only at locations as shown on plan (with circles)

Note:

1. All welds to be E70xx
2. All stiffener PS & vertical Ls to have Fy = 36 ksi.

LICENSED PROFESSIONAL ENGINEER — LESLIE E. ROBERTSON — No. 34360 — UNIVERSITY OF THE STATE OF NEW YORK

DRAWN S.C.

REVIEWED E.L.

12-JK3-7

SKILLING, HELLE, CHRISTIANSEN, ROBERTSON — Structural & Civil Engineers

PROJECT THE WORLD TRADE CENTER | TITLE CONSTRUCTION JOINT DETAIL | DATE 12-3-68

REVISIONS

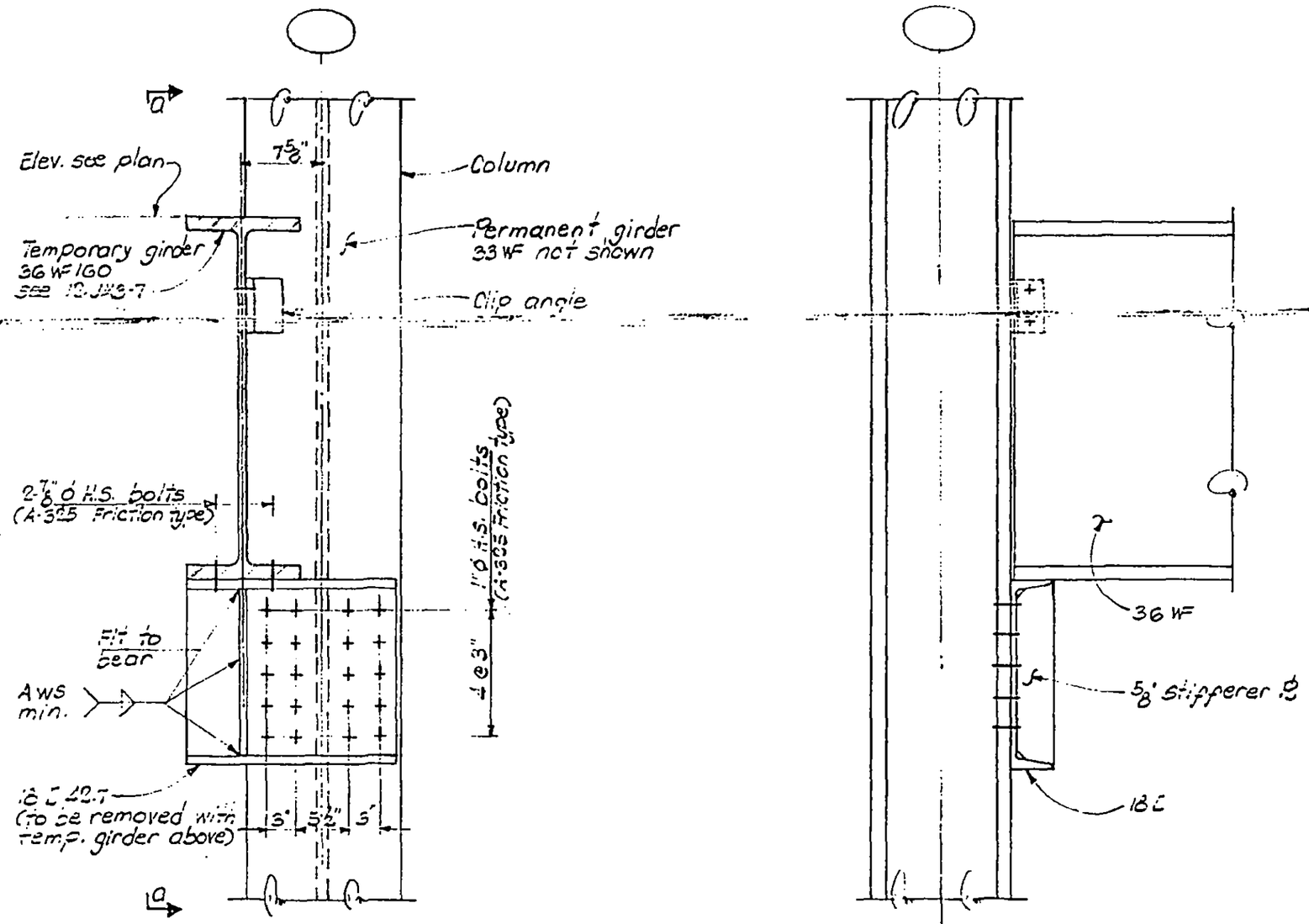

ELEVATION

Section a-a

DESIGNED

DRAWN

REVIEWED

12-JK3-8

SKILLING, HELLE, CHRISTIANSEN, ROBERTSON — Structural & Civil Engineers

PROJECT: THE WORLD TRADE CENTER | TITLE: CONSTRUCTION JOINT DETAILS | DATE: 1-3-69

REVISIONS

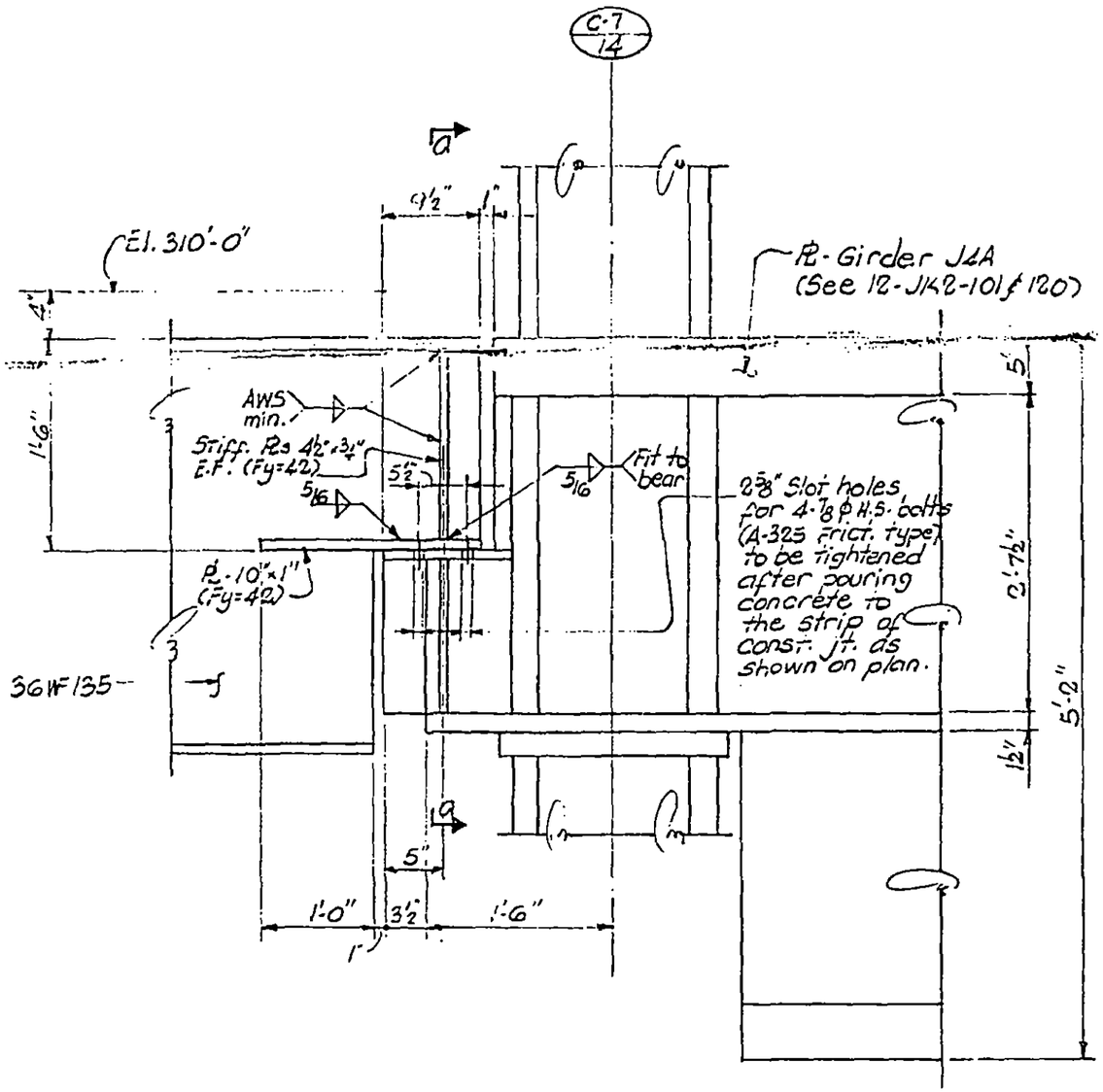

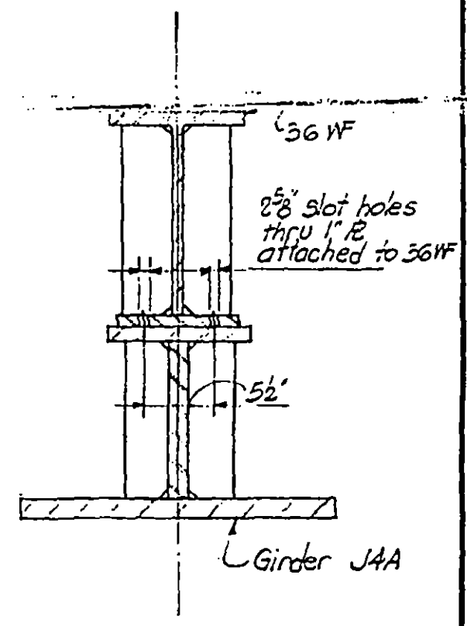

Section a-a

NOTES:
1. Provide washers 2½x⅝ (square or round) with Fy=50 ksi for all bolts over slot holes.

LICENSED PROFESSIONAL ENGINEER — LESLIE E. ROBERTSON — No. 34360 — UNIVERSITY OF THE STATE OF NEW YORK

DESIGNED

DRAWN S.T.M.

REVIEWED E.L.

12-JK3-9

SKILLING, HELLE, CHRISTIANSEN, ROBERTSON — Structural & Civil Engineers

PROJECT: THE WORLD TRADE CENTER | TITLE: CONSTRUCTION JOINT DETAIL | DATE: 1-3-69

REVISIONS

Bolt 'Y' - 1" ϕ H.S. bolts (A-490 friction type) Use ⅔ bolt capacity. Tighten bolts after pouring conc. to the strip of const. jt. as shown on plans. Provide 2½" x 5⅛" washers (Sq. or round) with Fy=50 ksi

1¾"

1"

El. see plan

1" ϕ slot holes Trib. B only

16 WF

Shim as required to insure beam bearing on girder

24 WF (Std. connection to column at each end)

Provide fill ℄ as required

Temp. girder 36WF160 (Fy=42) to be removed after tightening of bolt 'Y' and bolt 'Z' as shown on 12-JK3-7

7⅝" (7¾" For beam btwn. cols. K29-4 & K31-11)

Column

ELEVATION

L3 - 6x4 bolted or welded to col. at contractors option

Where girders occurs Ext. girder 4¾" beyond col. ℄ and bolts on this side only

Maintain ¾" clearance ea. side before any concreting work. Fill 2's are required (℟ thickness to be field measured)

24 WF Not shown

4¾"

7 @ 3" = 1" ϕ H.S. bolts (A-490 friction type)

4"

6" max.

Temp. girders

Column

5½"

Section a-a

NOTES:
1. All welds to be E70xx.

LICENSED PROFESSIONAL ENGINEER — LESLIE E. ROBERTSON — No. 34360 — UNIVERSITY OF THE STATE OF NEW YORK

DESIGNED

DRAWN S.T.M.

REVIEWED E.L.

12-JK3-10

SKILLING, HELLE, CHRISTIANSEN, ROBERTSON — Structural & Civil Engineers

PROJECT THE WORLD TRADE CENTER | TITLE CONSTRUCTION JOINT DETAIL | DATE 1-3-69

REVISIONS

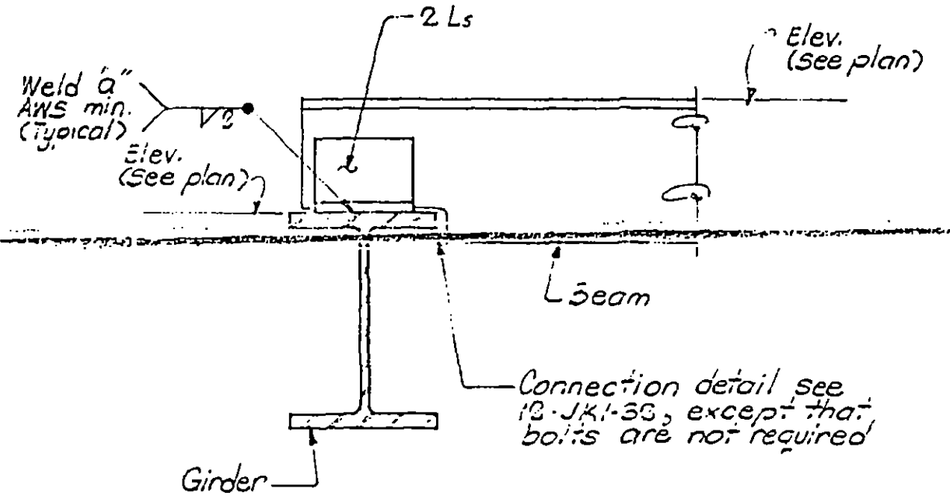

NOTES:

1. Weld "a" to be carried out after pouring concrete to the construction joint.

LICENSED PROFESSIONAL ENGINEER — LESLIE E. ROBERTSON — No. 34360 — UNIVERSITY OF THE STATE OF NEW YORK

DESIGNED

DRAWN S.T.M.

REVIEWED E.L.

12-JK3-11

SKILLING, HELLE, CHRISTIANSEN, ROBERTSON — Structural & Civil Engineers

PROJECT THE WORLD TRADE CENTER | TITLE CONSTRUCTION JOINT DETAIL | DATE 1-3-69

REVISIONS

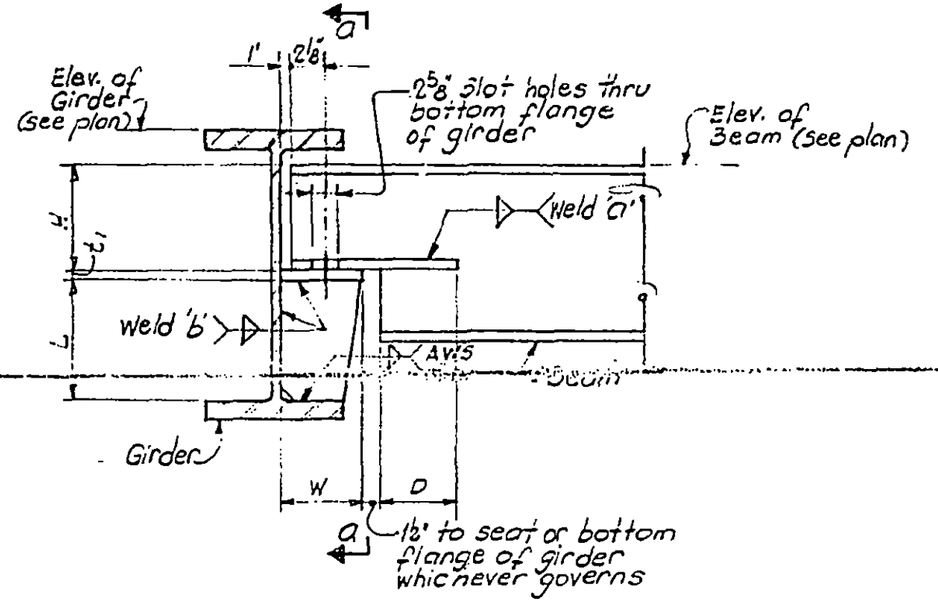

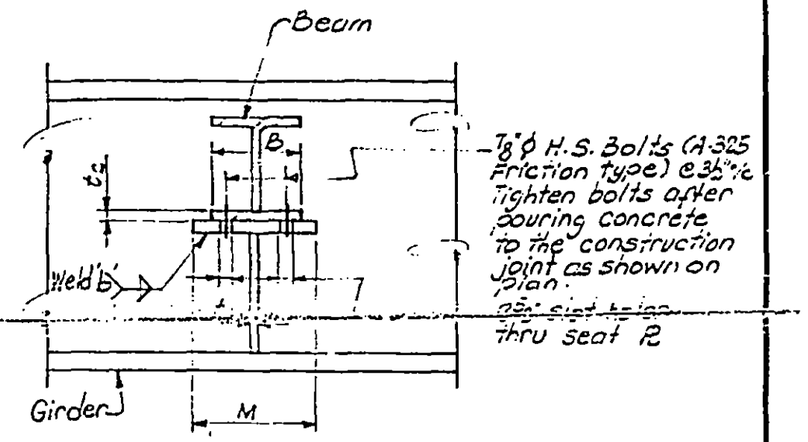

Section a-a

NOTES:
1. All material to be Fy=42 KSI
2. All welds to be E70XX.
3. Provide washers 2½"x5⅝" (round or square) with Fy=50 for all bolts over slot holes.

DETAIL No.	GIRDER		BEAM							SEAT				
	SIZE	ELEV.	SIZE	ELEV.	H	B	t_2	D	WELD 'a'	W	L	M	t_1	WELD 'b'
1	24WF110	309'-1"	16WF78	309'-1"	1'-2¼"	6"	1"	6"	5/16"	5"	9"	8"	1"	7/16"
2	36WF135	309'-1"	16WF71	309'-1"	NO BLOCKING					6"	17 9/16"	8"	1"	5/16"
3	36W135	309'-1"	16WF36	309'-1"	NO BLOCKING					6"	17 13/16"	8"	1"	5/16"
4	33WF141	289'-0½"	24WF68	289'-5"	1'-9 13/16"	8"	1"	8"	5/16"	5"	14"	8"	1"	5/16"
5	33WF141	289'-0½"	24WF84	289'-5"	1'-8 13/16"	8"	1"	9"	5/16"	5"	15"	8"	1"	5/16"
6	J4M	289'-3"	16B31	289'-1"	NO BLOCKING					6"	29 5/8"	8"	1"	5/16"
7	30WF172	289'-5"	16B31	289'-5"	NO BLOCKING					6"	12 13/16"	8"	1"	5/16"
8	33WF240	288'-6"	30WF108	289'-5"	NO BLOCKING					5"	11¼"	8"	1"	½"
9	33WF240	288'-6"	21WF73	288'-5"	1'-4 7/8"	8"	1"	8"	5/16"	5"	13"	8"	1"	5/16"

LICENSED PROFESSIONAL ENGINEER LESLIE E. ROBERTSON No. 34360 UNIVERSITY OF THE STATE OF NEW YORK

DESIGNED

DRAWN S.T.M.

REVIEWED E.L.

12-JK3-12

SKILLING, HELLE, CHRISTIANSEN, ROBERTSON — Structural & Civil Engineers

PROJECT THE WORLD TRADE CENTER | TITLE CONSTRUCTION JOINT DETAILS | DATE 1-3-69

REVISIONS

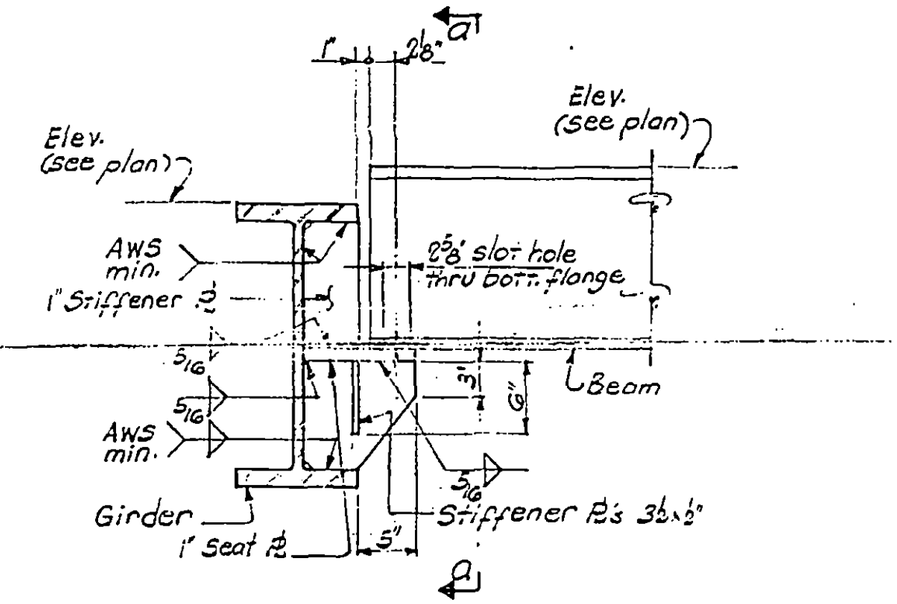

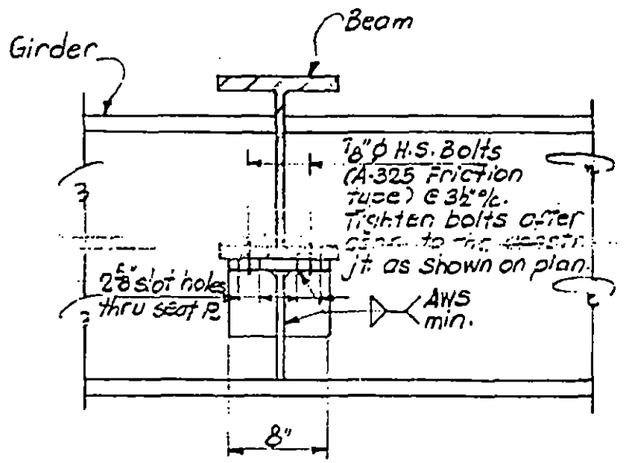

Section a

DETAIL A

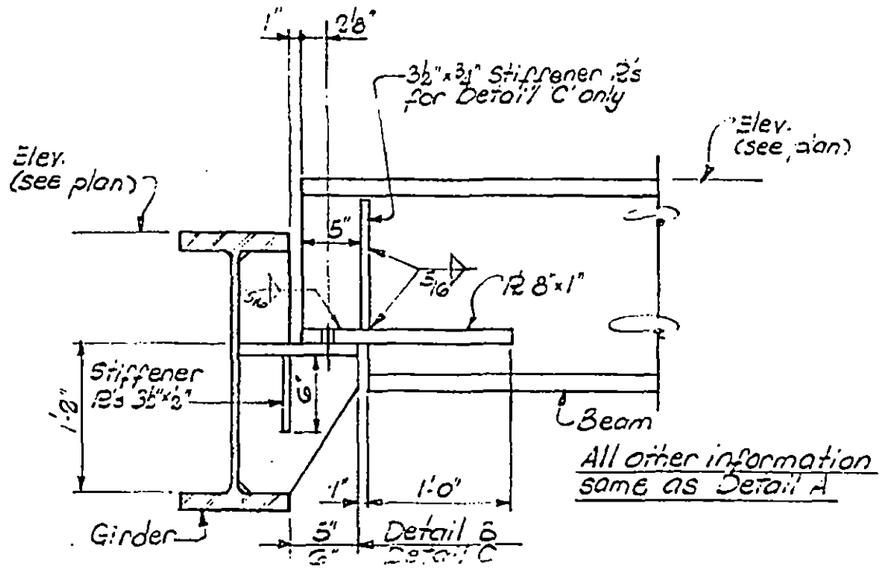

All other information same as Detail A

DETAIL B

DETAIL C

LICENSED PROFESSIONAL ENGINEER — LESLIE E. ROBERTSON — No. 34360 — UNIVERSITY OF THE STATE OF NEW YORK

DESIGNED

DRAWN S.T.M.

REVIEWED E.L.

12-JK3-13

SKILLING, HELLE, CHRISTIANSEN, ROBERTSON — Structural & Civil Engineers

PROJECT THE WORLD TRADE CENTER | TITLE ESCALATOR SUPPORTING BEAMS AT PATH PLATFORMS (El 250) | DATE 12-16-69

REVISIONS

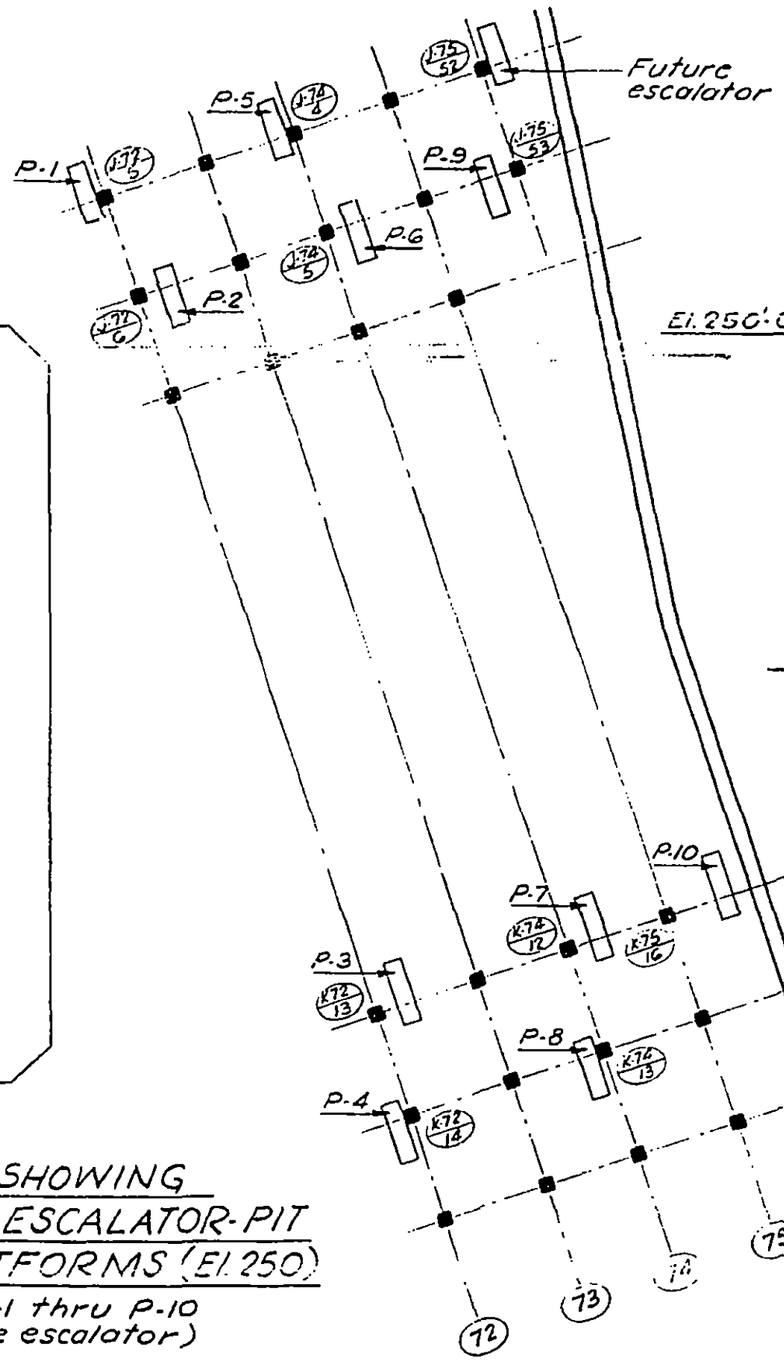

TOWER A

KEY PLAN SHOWING
LOCATION OF ESCALATOR-PIT
AT PATH PLATFORMS (El. 250)

(Escalators P-1 thru P-10
and one future escalator)

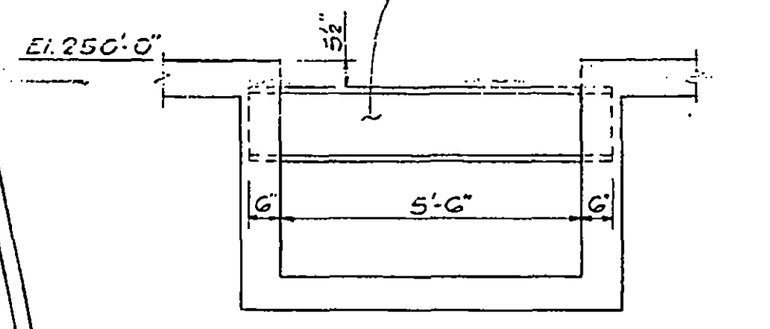

Section Thru Escalator Pit
(no scale)

NOTE:
See concrete dwgs SCJ-29 and SCK-33 for location of escalator pits & beams.

LICENSED PROFESSIONAL ENGINEER
LESLIE E. ROBERTSON
No 34360
UNIVERSITY OF THE STATE OF NEW YORK

DESIGNED

DRAWN S.C.

REVIEWED E.L.

12-JK3-30

SKILLING, HELLE, CHRISTIANSEN, ROBERTSON — Structural & Civil Engineers

PROJECT: THE WORLD TRADE CENTER | TITLE: UTILITY SUPPORTS ALONG EAST PERIMETER WALL | DATE: 12-17-68

REVISIONS

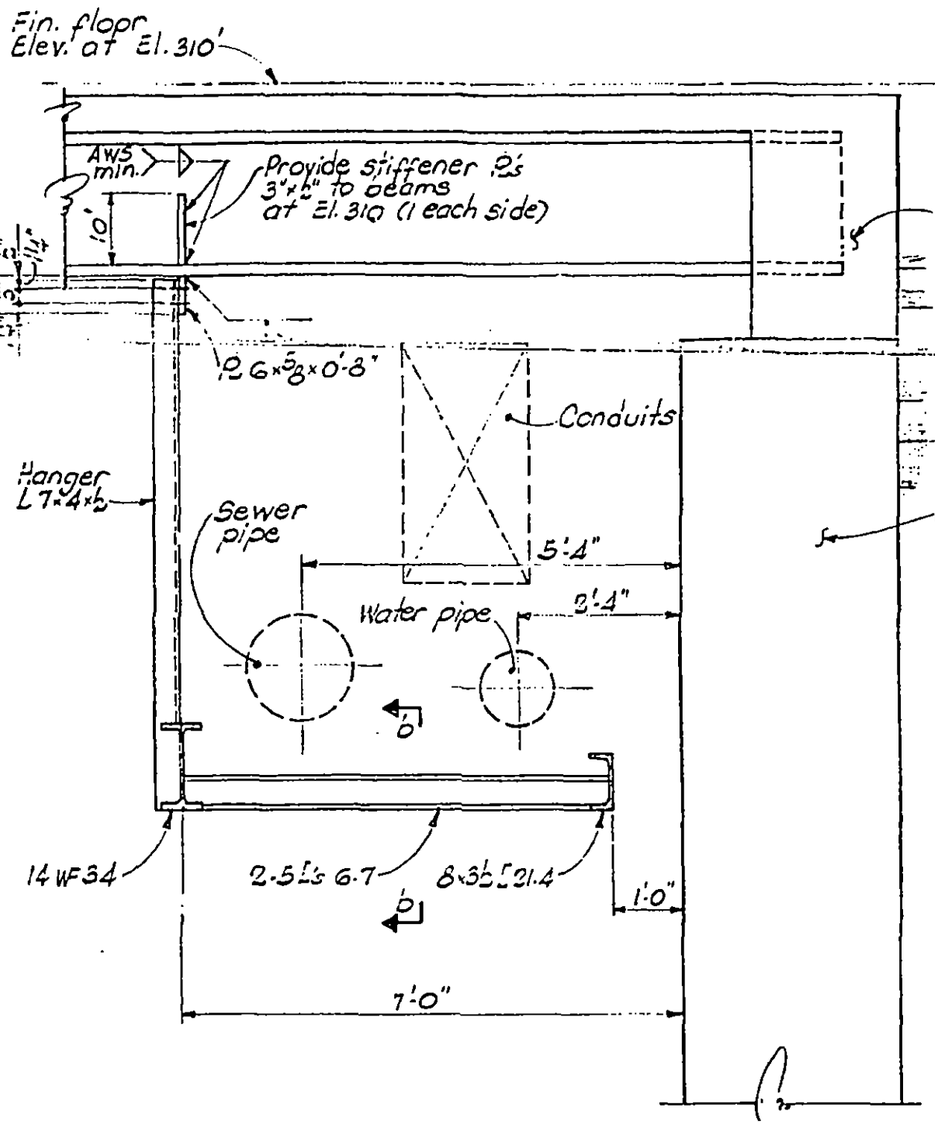

Section a-a
(½" = 1'-0")

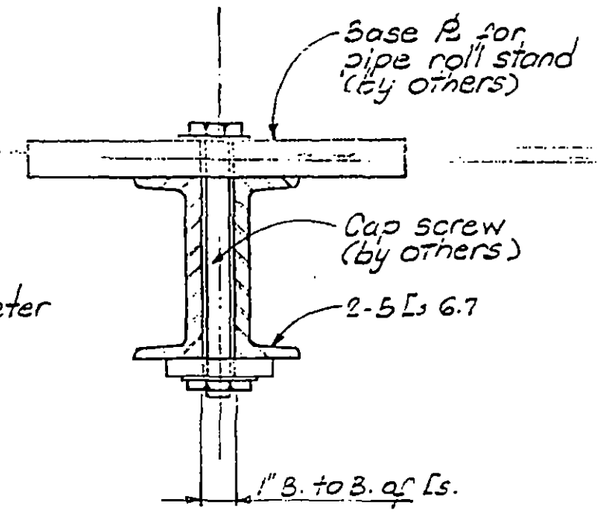

Section b-b
(3" = 1'-0")

NOTES:
1. All steel to be A-36.
2. See plan for elevation of beams.

LICENSED PROFESSIONAL ENGINEER — LESLIE E. ROBERTSON — No. 34360 — UNIVERSITY OF THE STATE OF NEW YORK

DESIGNED

DRAWN

REVIEWED

12-JK3-50

SKILLING, HELLE, CHRISTIANSEN, ROBERTSON — Structural & Civil Engineers

PROJECT: THE WORLD TRADE CENTER | TITLE: UTILITY SUPPORTS ALONG EAST PERIMETER WALL | DATE: 12-17-68

REVISIONS

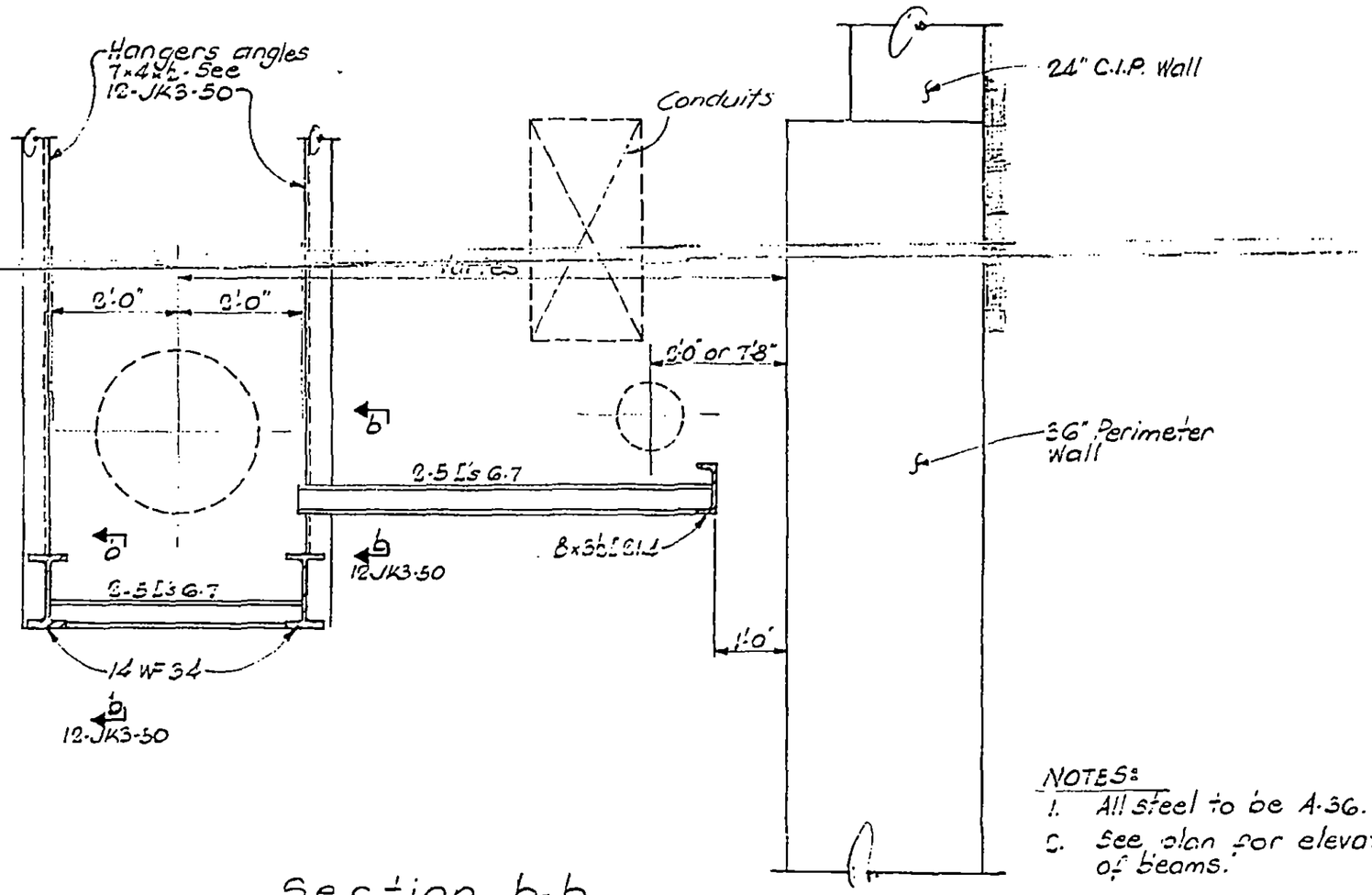

Section b-b
(½" = 1'-0")

NOTES:
1. All steel to be A-36.
2. See plan for elevation of beams.

LICENSED PROFESSIONAL ENGINEER — LESLIE E. ROBERTSON — No. 34360 — UNIVERSITY OF THE STATE OF NEW YORK

DESIGNED

DRAWN

REVIEWED

12-JK3-51

SKILLING, HELLE, CHRISTIANSEN, ROBERTSON — Structural & Civil Engineers

PROJECT THE WORLD TRADE CENTER | TITLE UTILITY SUPPORTS ALONG EAST PERIMETER WALL | DATE 12-17-68

REVISIONS

4-18-69

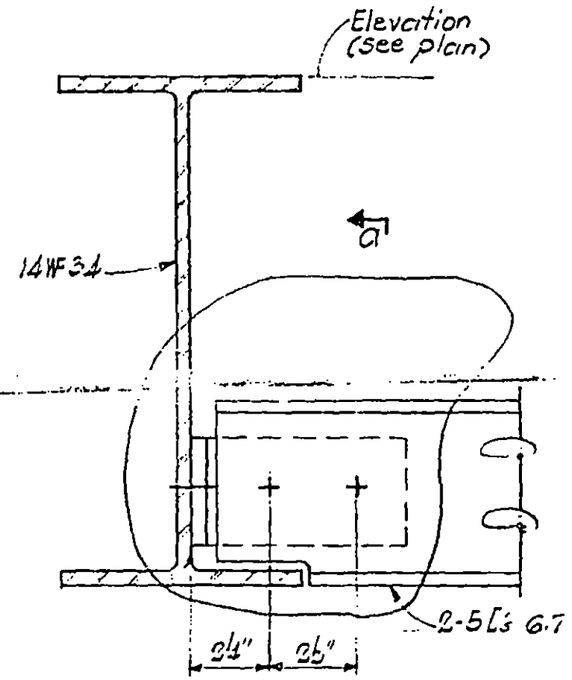

DETAIL – 1
DETAIL – 2

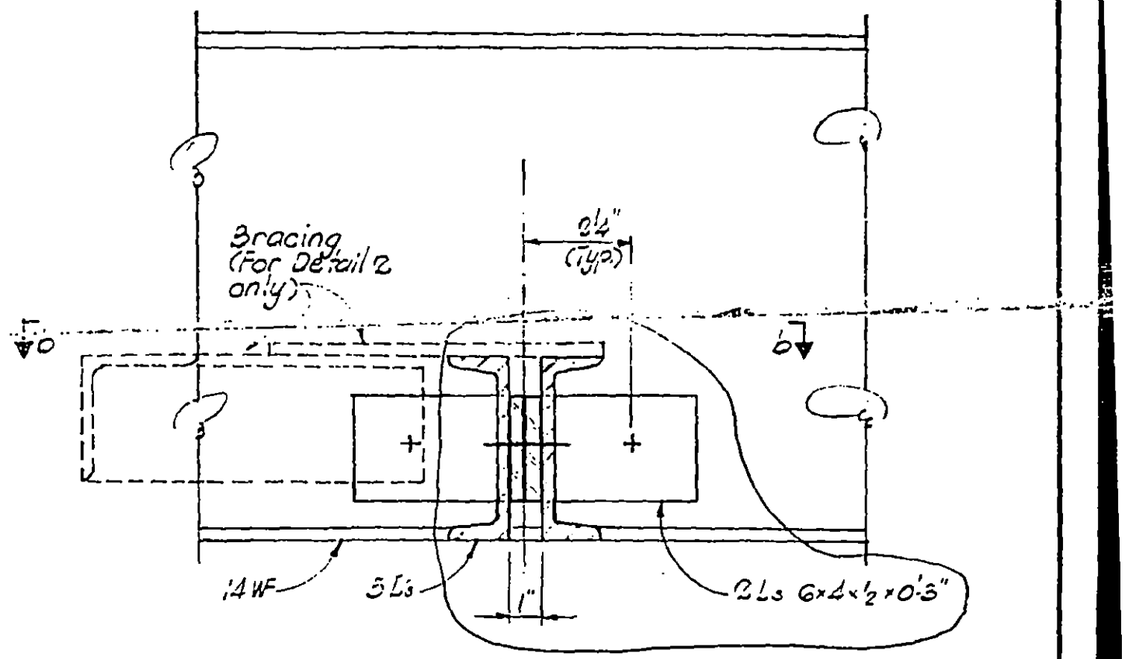

Section a-a

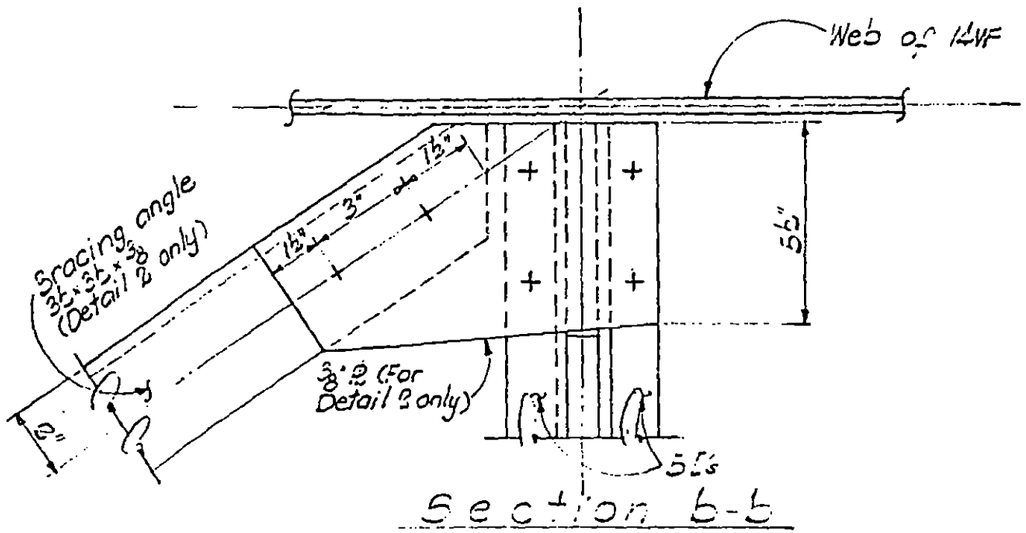

Section b-b

NOTES:

1. All bolts shown are ¾" Ø H.S. A-325 friction type.
2. All steel to be A-36.

LICENSED PROFESSIONAL ENGINEER — LESLIE E. ROBERTSON — No. 34360 — UNIVERSITY OF THE STATE OF NEW YORK

DESIGNED

DRAWN S.C.

REVIEWED E.L.

12-JK3-52

SKILLING, HELLE, CHRISTIANSEN, ROBERTSON — Structural & Civil Engineers

PROJECT: THE WORLD TRADE CENTER | TITLE: UTILITY SUPPORTS ALONG EAST PERIMETER WALL | DATE: 12-17-68

REVISIONS

4-18-69

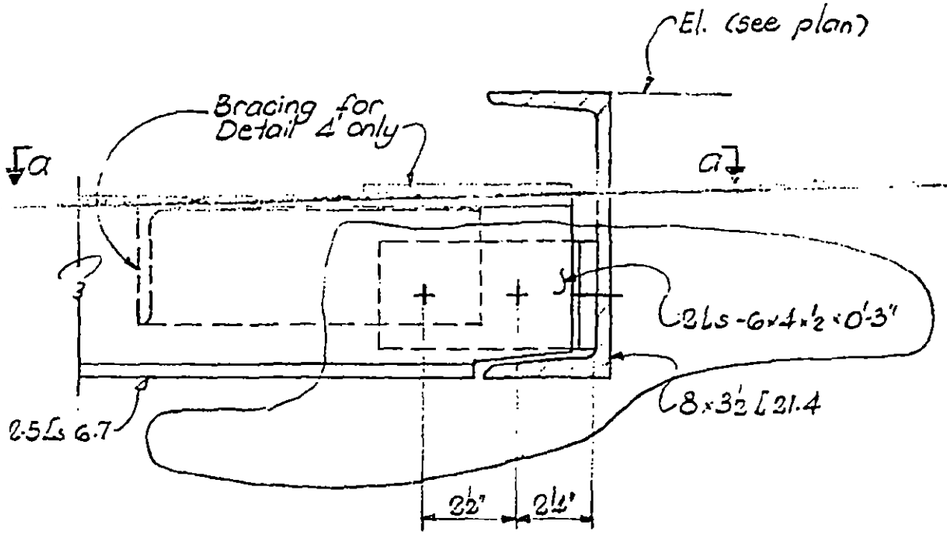

Detail 3
Detail 4

NOTES:

1. All bolts shown are ⅞"ø H.S. A-325 friction type.
2. All steel to be A-36.

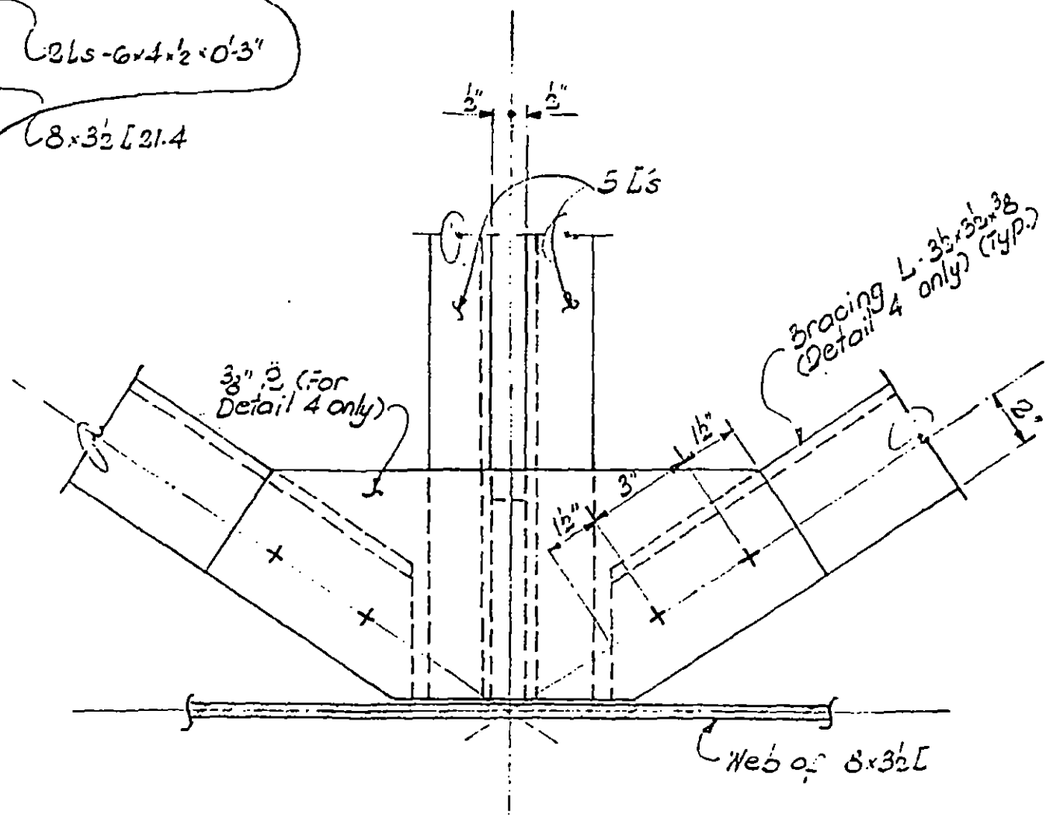

Section a-a

12-JK3-53

LICENSED PROFESSIONAL ENGINEER
LESLIE E. ROBERTSON
No 34360
UNIVERSITY OF THE STATE OF NEW YORK

DESIGNED

DRAWN
S.C.

REVIEWED
E.L.

SKILLING, HELLE, CHRISTIANSEN, ROBERTSON — Structural & Civil Engineers

PROJECT: THE WORLD TRADE CENTER | TITLE: UTILITY SUPPORTS ALONG EAST PERIMETER WALL | DATE: 12-17-68

REVISIONS

5-29-69

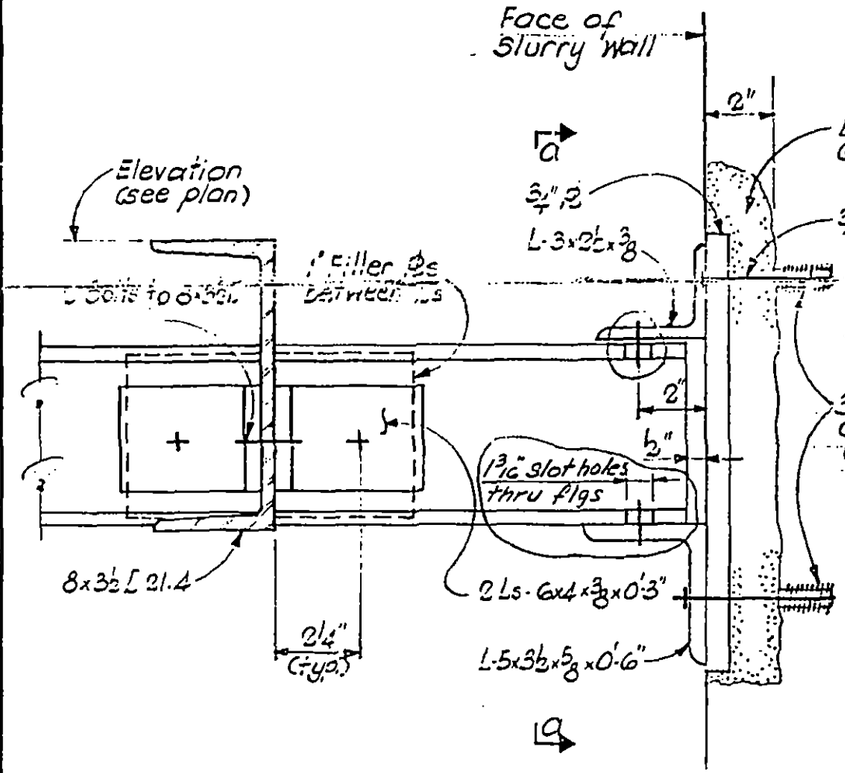

DETAIL 5

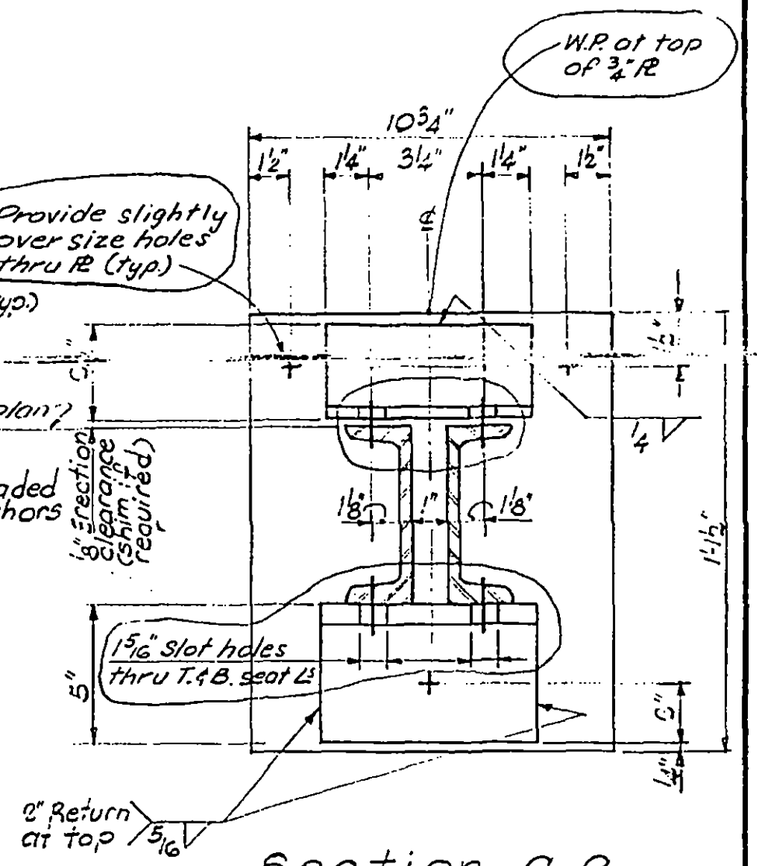

Section a-a

NOTES:

1. All bolts shown are ¾" ø H.S. A-325 friction type.
2. All steel to be A-36.
3. All welds shown to be E70XX.
4. See "Notes to Fabricator" on plan.

LICENSED PROFESSIONAL ENGINEER — LESLIE E. ROBERTSON — No. 34360 — UNIVERSITY OF THE STATE OF NEW YORK

DESIGNED

DRAWN: S.C.

REVIEWED: E.L.

12-JK3-54

SKILLING, HELLE, CHRISTIANSEN, ROBERTSON — Structural & Civil Engineers

PROJECT: THE WORLD TRADE CENTER | TITLE: UTILITY SUPPORTS ALONG EAST PERIMETER WALL | DATE: 12-17-68

REVISIONS

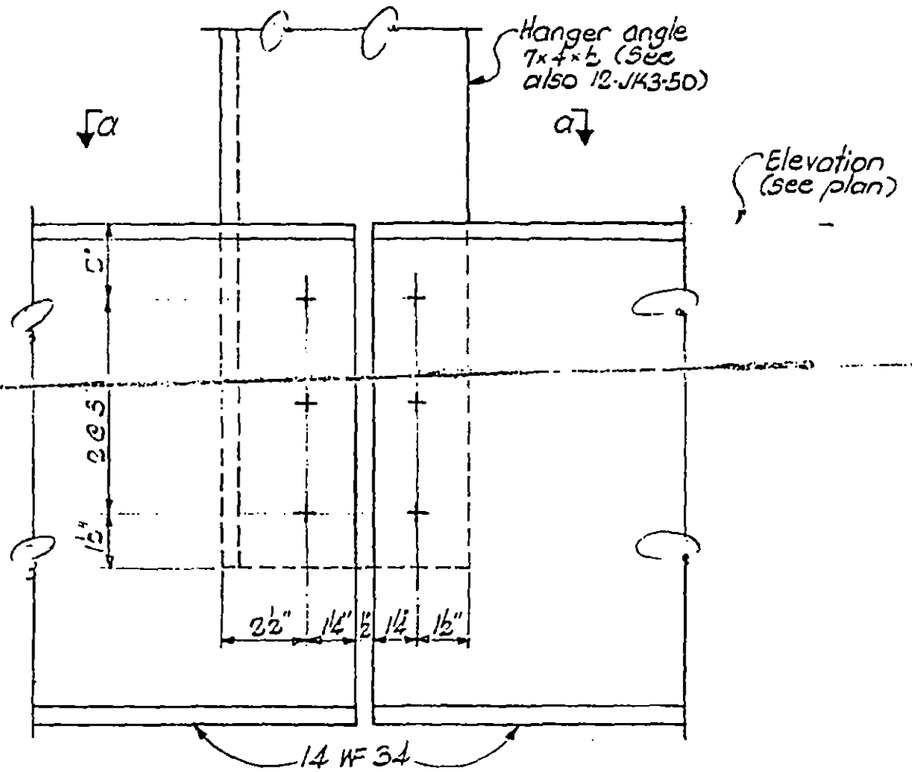

DETAIL 6

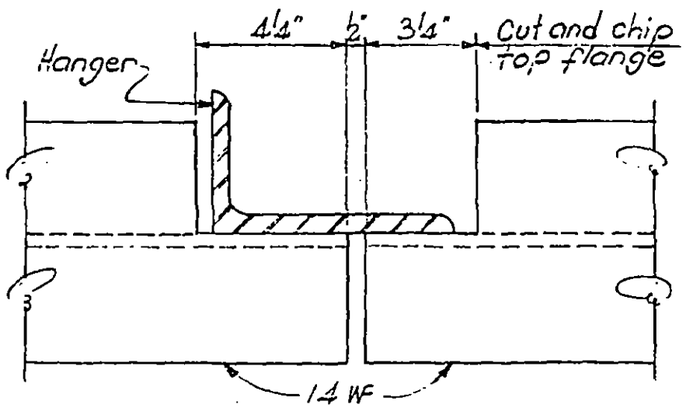

Section a-a

NOTES:
1. All bolts shown are ¾"ø H.S. A-325 friction type.
2. All steel to be A-36.

12-JK3-55

LICENSED PROFESSIONAL ENGINEER — LESLIE E. ROBERTSON — No. 34360 — UNIVERSITY OF THE STATE OF NEW YORK

DESIGNED

DRAWN

REVIEWED

SKILLING, HELLE, CHRISTIANSEN, ROBERTSON — Structural & Civil Engineers

PROJECT THE WORLD TRADE CENTER | TITLE UTILITY SUPPORTS ALONG EAST PERIMETER WALL | DATE 12-17-68

REVISIONS

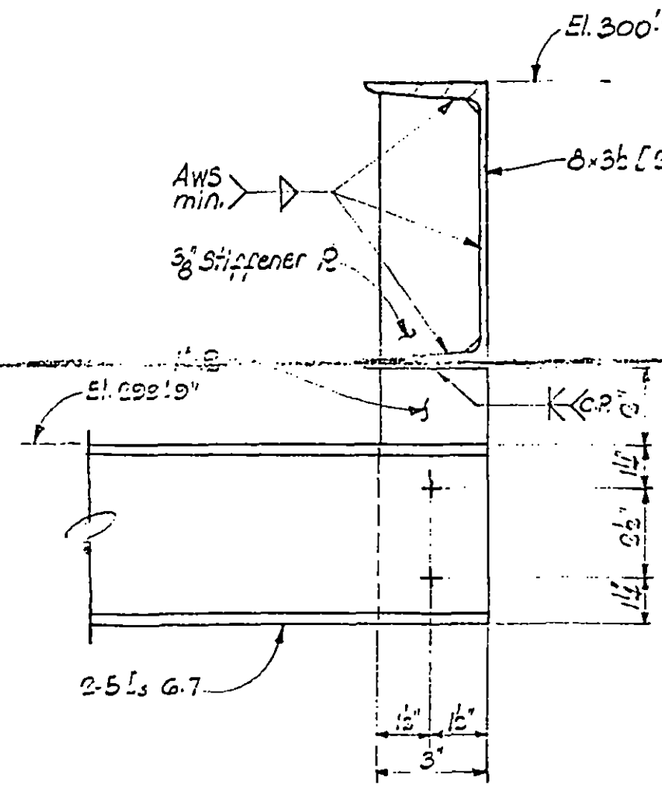

DETAIL 7

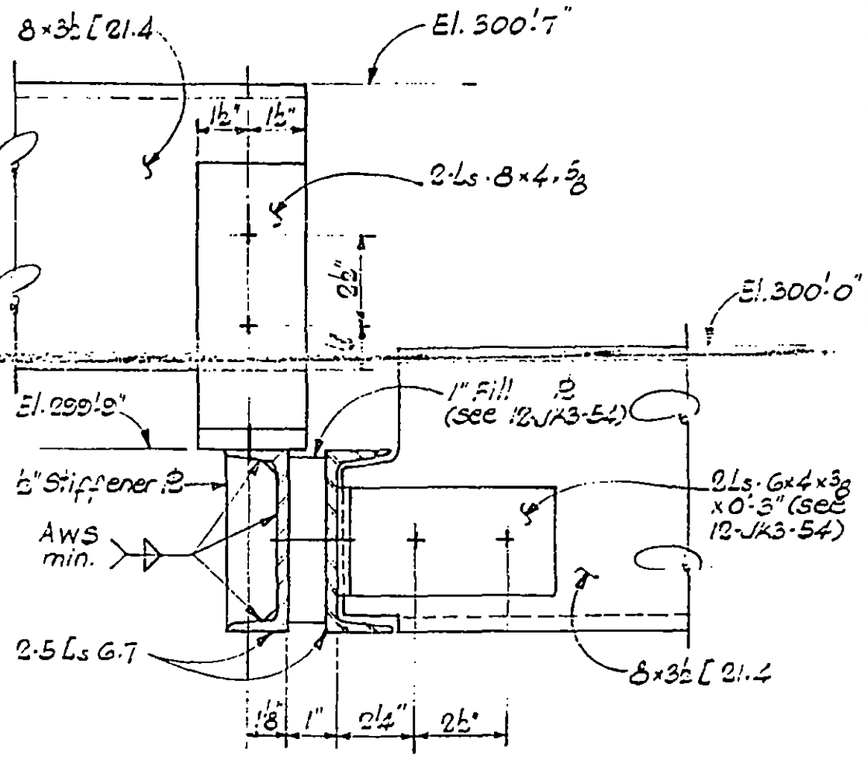

DETAIL 8

NOTES:

1. All bolts shown are ¾"ø H.S. A-325 friction type.
2. All steel to be A-36.

LICENSED PROFESSIONAL ENGINEER — LESLIE E. ROBERTSON — No. 34360 — UNIVERSITY OF THE STATE OF NEW YORK

DESIGNED

DRAWN

REVIEWED

12-JK3-56

SKILLING, HELLE, CHRISTIANSEN, ROBERTSON — Structural & Civil Engineers

PROJECT: THE WORLD TRADE CENTER | TITLE: UTILITY SUPPORTS ALONG EAST PERIMETER WALL | DATE: 12-17-68

REVISIONS

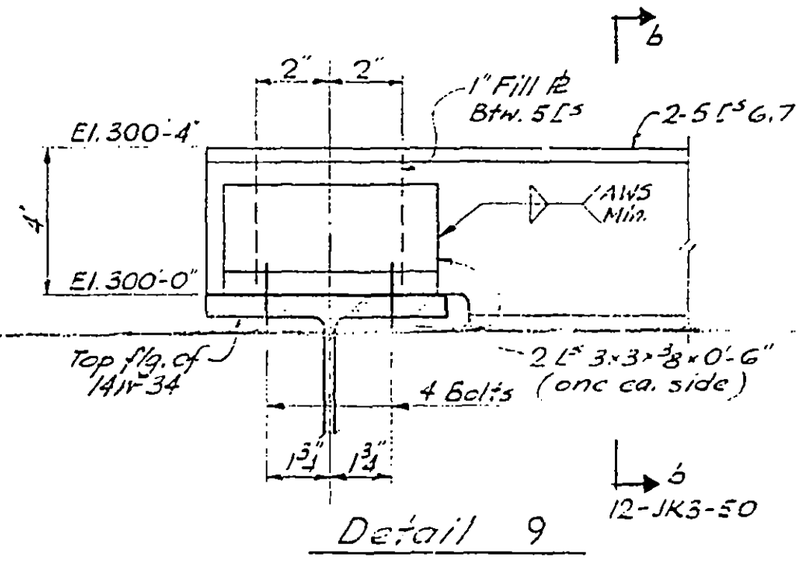

Detail 9

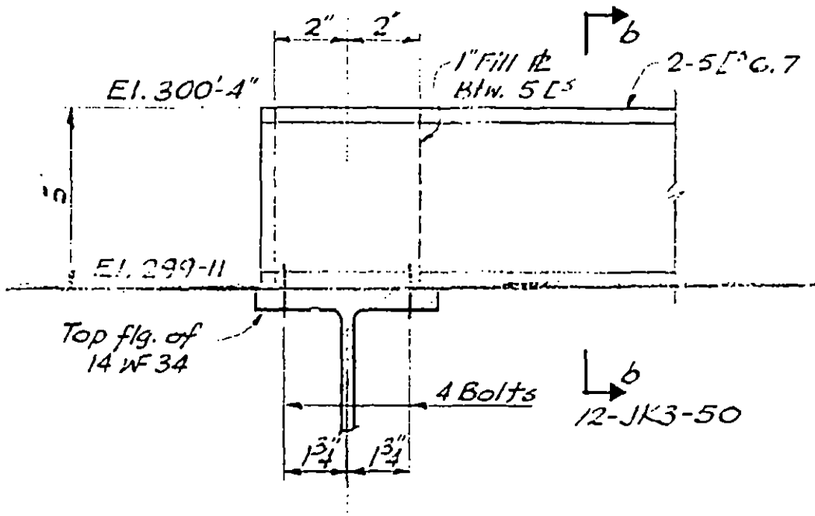

Detail 10

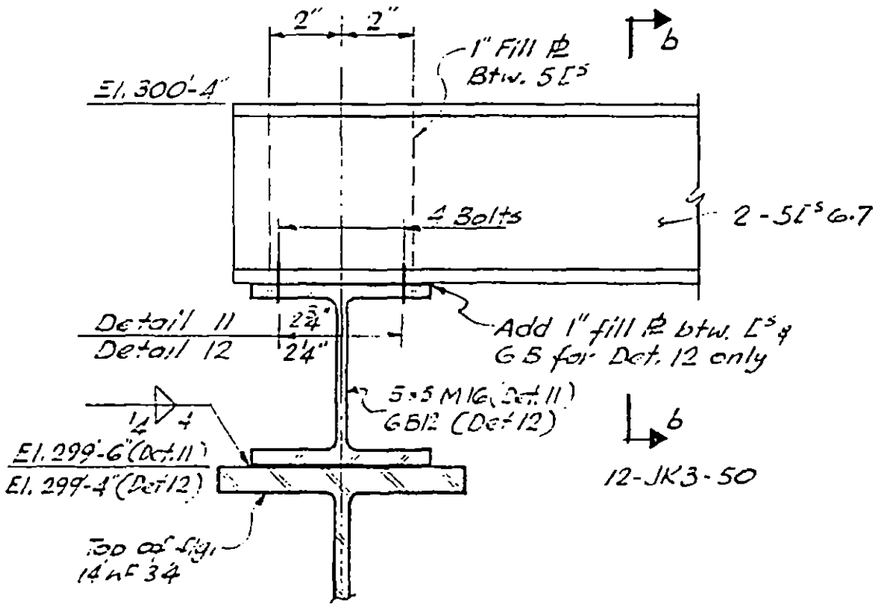

Detail 11

Detail 12

Notes:

1. All bolts shown are 3/4" Φ H.S. A 325 Friction type
2. All steel to be A-36
3. All welds to be E70XX

LICENSED PROFESSIONAL ENGINEER — LESLIE E. ROBERTSON — No. 34360 — UNIVERSITY OF THE STATE OF NEW YORK

DESIGNED

DRAWN

REVIEWED

12-JK3-57

SKILLING, HELLE, CHRISTIANSEN, ROBERTSON — Structural & Civil Engineers

PROJECT THE WORLD TRADE CENTER | TITLE UTILITY SUPPORTS ALONG EAST PERIMETER WALL | DATE 12-17-68

REVISIONS

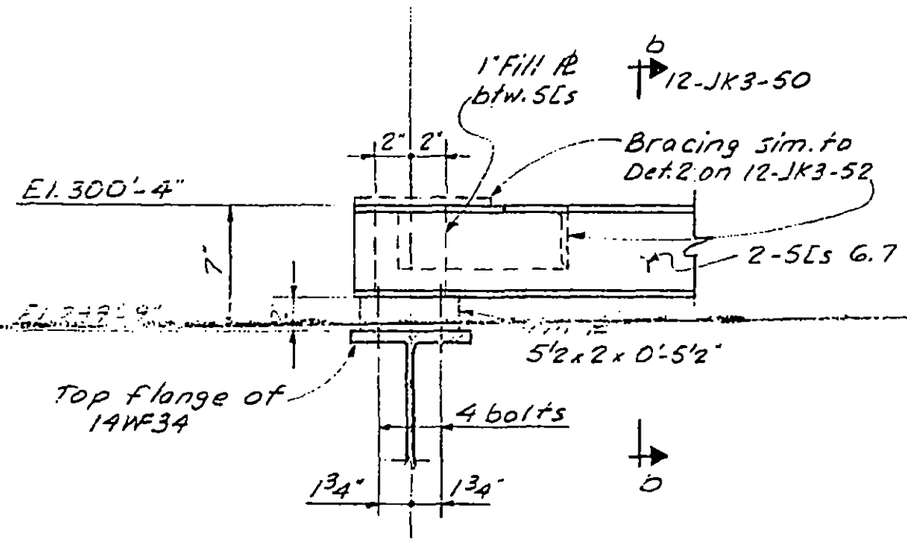

DETAIL – 13

LICENSED PROFESSIONAL ENGINEER
LESLIE E. ROBERTSON
No. 34360
UNIVERSITY OF THE STATE OF NEW YORK

DESIGNED

DRAWN

REVIEWED

12-JK3-58

SKILLING, HELLE, CHRISTIANSEN, ROBERTSON — Structural & Civil Engineers

PROJECT THE WORLD TRADE CENTER | TITLE UTILITY SUPPORT ALONG EAST SLURRY WALL | DATE 12-17-68

REVISIONS

5-29-69

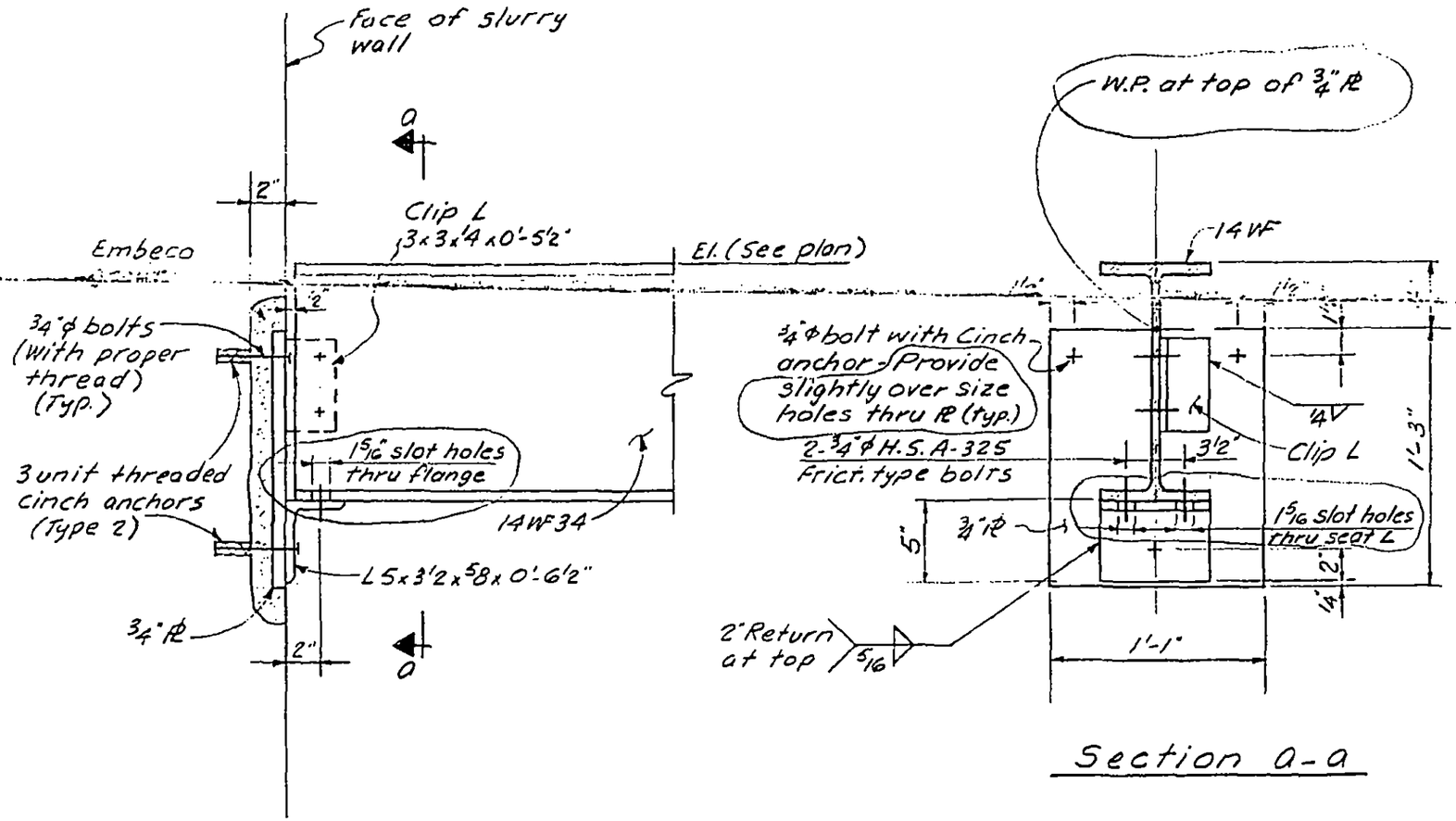

Section a-a

DETAIL - 14

Notes:

1. All welds to be E70xx.
2. All steel to be A-36.

LICENSED PROFESSIONAL ENGINEER — LESLIE E. ROBERTSON — No. 34360 — UNIVERSITY OF THE STATE OF NEW YORK

DRAWN S.C.

REVIEWED E.L.

12-JK3-59

SKILLING, HELLE, CHRISTIANSEN, ROBERTSON — Structural & Civil Engineers

PROJECT THE WORLD TRADE CENTER | TITLE MOMENT CONNECTION SCHEDULE AT EL.332' | DATE 1-13-69

REVISIONS

9-16-69

GIRDER TO COLUMN FLANGE

Connection Detail No. & Type		Bolts "A"		Bolts "B"		Plates (in.) #1	Plates (in.) #2			Weld (in.) #1				Remark
No.	Type	Total No. of Bolts	Diam.(in.)	Total No. of Bolts	Diam.(in.)	t_1	t_2							
1	(I-A)	8	1⅛	18	1⅛	½*	1			⅜				
2	(I-A)	8	1⅛	16	1⅛	½*	⅞			⅜				
3	(I-A)	8	1⅛	14	1⅛	½*	¾			⅜				
4	(I-A)	7	1	14	1⅛	⅜*	¾			⅜				
5	(I-A)	8	1⅛	12	1⅛	½*	⅝			⅜				
6	(I-A)	7	1	12	1⅛	⅜*	⅝			⅜				
7	(I-A)	6	1	12	1	⅜*	½			⅜				
8	(I-A)	6	1	10	1	⅜*	7/16			⅜				
9	(I-A)	8	1⅛	20	1⅛	½*	1			⅜				

Notes:
1. See Dwg. 12-JK4-4 for explanation of schedule.

LICENSED PROFESSIONAL ENGINEER — LESLIE E. ROBERTSON — No. 34360 — STATE OF NEW YORK

DESIGNED

DRAWN S.C.

REVIEWED R.T. & E.L.

12-JK4-2

SKILLING, HELLE, CHRISTIANSEN, ROBERTSON — Structural & Civil Engineers

PROJECT: THE WORLD TRADE CENTER | TITLE: MOMENT CONNECTION SCHEDULE AT EL. 332' | DATE: 1-13-69

REVISIONS

9-16-69

GIRDER TO COLUMN WEB

Connection Detail No. & Type		Bolts "A"		Bolts "B"		Plates #1	Plates #2		Weld #1	Weld #2		Remark
No.	Type	Total No. of Bolts	Diam.	Total No. of Bolts	Diam.	t_1	t_2					
1	(II-A)	7	1	12	1 1/8	1/2*	3/4		3/8	3/8		
2	(II-A)	6	1	12	1	3/8*	5/8		5/16	5/16		
3	(II-A)	6	1	10	1	3/8*	1/2		5/16	5/16		
4	(II-A)	8	1	10	1	3/8*	1/2		5/16	5/16		

Notes:

1. See Dwg. 12-JK4-4 for explanation of schedule.

LICENSED PROFESSIONAL ENGINEER — LESLIE E. ROBERTSON — No. 34360 — CERTIFICATE OF THE STATE OF NEW YORK

DESIGNED

DRAWN: S.C.

REVIEWED: R.T. & E.L.

12-JK4-3

SKILLING, HELLE, CHRISTIANSEN, ROBERTSON — Structural & Civil Engineers

PROJECT: THE WORLD TRADE CENTER | TITLE: GIRDER TO COL. FLANGE & WEB MOMENT CONN. DETAIL | DATE: 1-13-69

REVISIONS
9-16-69

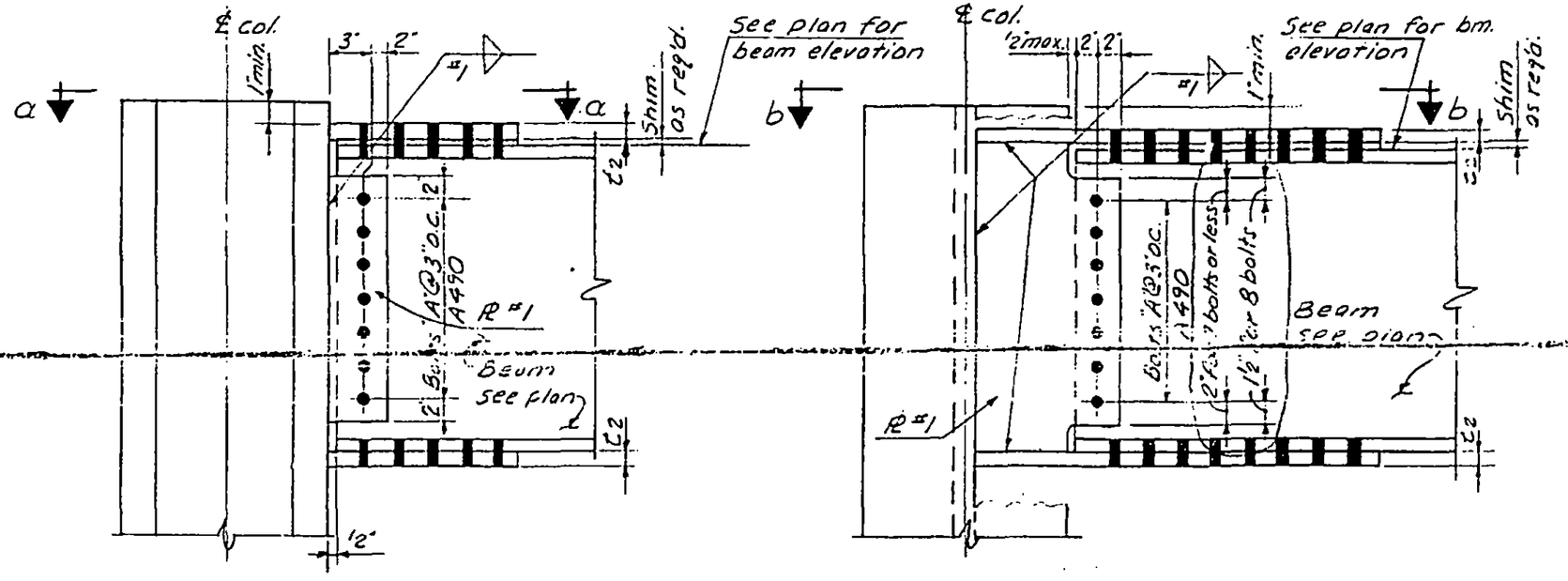

TYPE (I-A) ELEVATION

TYPE (II-A) ELEVATION

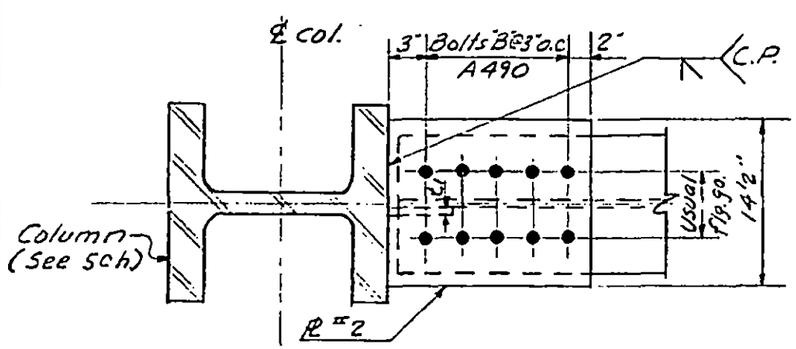

Section a-a
(Typ. Top & Bottom Flange)

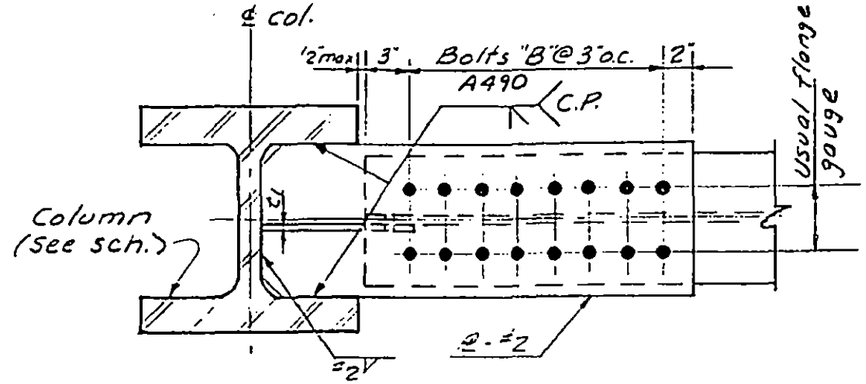

Section b-b
(Typ. Top & Bottom Flange)

Notes:

1. All Rs to be Fy = 56 ksi except as noted.
   * —— Fy = 36 ksi
   ** —— Fy = 42 ksi
2. All bolts shown to be H.S. Friction Type.
3. All welds to be E70xx
4. Type I-B & II-B —— 2 rows of group 'A' bolts.
   Type I-C & II-C —— 4 rows of group 'B' bolts.
   Type I-D & II-D —— 2 rows of group 'A' bolts & 4 rows of group 'B' bolts.
5. See schedules 12-JK4-2 & 12-JK4-3 for bolts, plates & weld.

LICENSED PROFESSIONAL ENGINEER — LESLIE E. ROBERTSON — No. 34360 — STATE OF NEW YORK

DESIGNED

DRAWN: S.C.

REVIEWED: R.T. & E.L.

12-JK4-4

SKILLING, HELLE, CHRISTIANSEN, ROBERTSON — Structural & Civil Engineers

PROJECT: THE WORLD TRADE CENTER | TITLE: BEAM CONNECTION DETAIL TO TOWER (EL. 332') | DATE: 1-13-69

REVISIONS
10-14-69
10-23-69
12-8-69
4-7-72

Detail No.	Existing Seat at Tower Columns: Seat Type Conn.	B	Elev. at Top of Seat	Beam Detail: A	C
A-1	G	6½"	328'-3⅝"	1'-0"	1½"
A-2	H	8"	328'-9⅜"	0'-9"	1½"
A-3	G	5½"	329'-0¼"	—	1½"
A-4	H	6"	329'-3"	0'-9"	1½"
A-5	G	6"	329'-3"	0'-9"	1½"
A-6	G-1	5"	328'-2½"	—	1½"
A-7	G-1	5"	324'-1"	—	1½"
A-8	G-1	5"	322'-8½"	—	1½"
A-9	G-1	5"	318'-7"	—	1½"
A-10	G-1	5"	317'-2½"	—	1½"
A-11	G-1	5"	313'-1"	—	1½"
A-12	G-1	5"	311'-8½"	—	1½"
A-13	G	6"	329'-3"	—	1½"

Detail No.	Existing Seat at Tower Columns: Seat Type Conn.	B	Elev. at Top of Seat	Beam Detail: A	C
B-1	G	6½"	328'-5¾"	1'-0"	1½"
B-2	H	8"	328'-5¾"	0'-9"	1½"
B-3	H	5"	329'-3⅝"	0'-9"	1½"
B-4	G-1	5½"	329'-3⅜"	0'-9"	1½"
B-5	G	5½"	329'-3⅜"	0'-9"	1½"
B-6	G-1	5"	324'-1"	0'-9"	1½"
B-7	G-1	5"	322'-8½"	0'-9"	1½"
B-8	G-1	5"	318'-7"	0'-9"	1½"
B-9	G-1	5"	317'-2½"	0'-9"	1½"
B-10	G-1	5"	313'-1"	0'-9"	1½"
B-11	G-1	5"	311'-8½"	0'-9"	1½"
* B-12	G-1	5½"	328'-2½"	0'-9"	1½"

NOTES:
1. See Dwg. 12-JK4-6 for explanation of schedule.

* Remove existing seat from Tower column and field weld new seat as shown on 12-JK4-7

LICENSED PROFESSIONAL ENGINEER — TERRIE E. ROBERTSON — No. 34360 — OF THE STATE OF NEW YORK

DESIGNED
DRAWN J. Adams
REVIEWED R.T. & E.L.

12-JK4-5

SKILLING, HELLE, CHRISTIANSEN, ROBERTSON — Structural & Civil Engineers

PROJECT: THE WORLD TRADE CENTER | TITLE: BEAM CONNECTION DETAIL TO TOWER(EL.332') | DATE: 1-13-69

REVISIONS
10-23-69
12-8-69

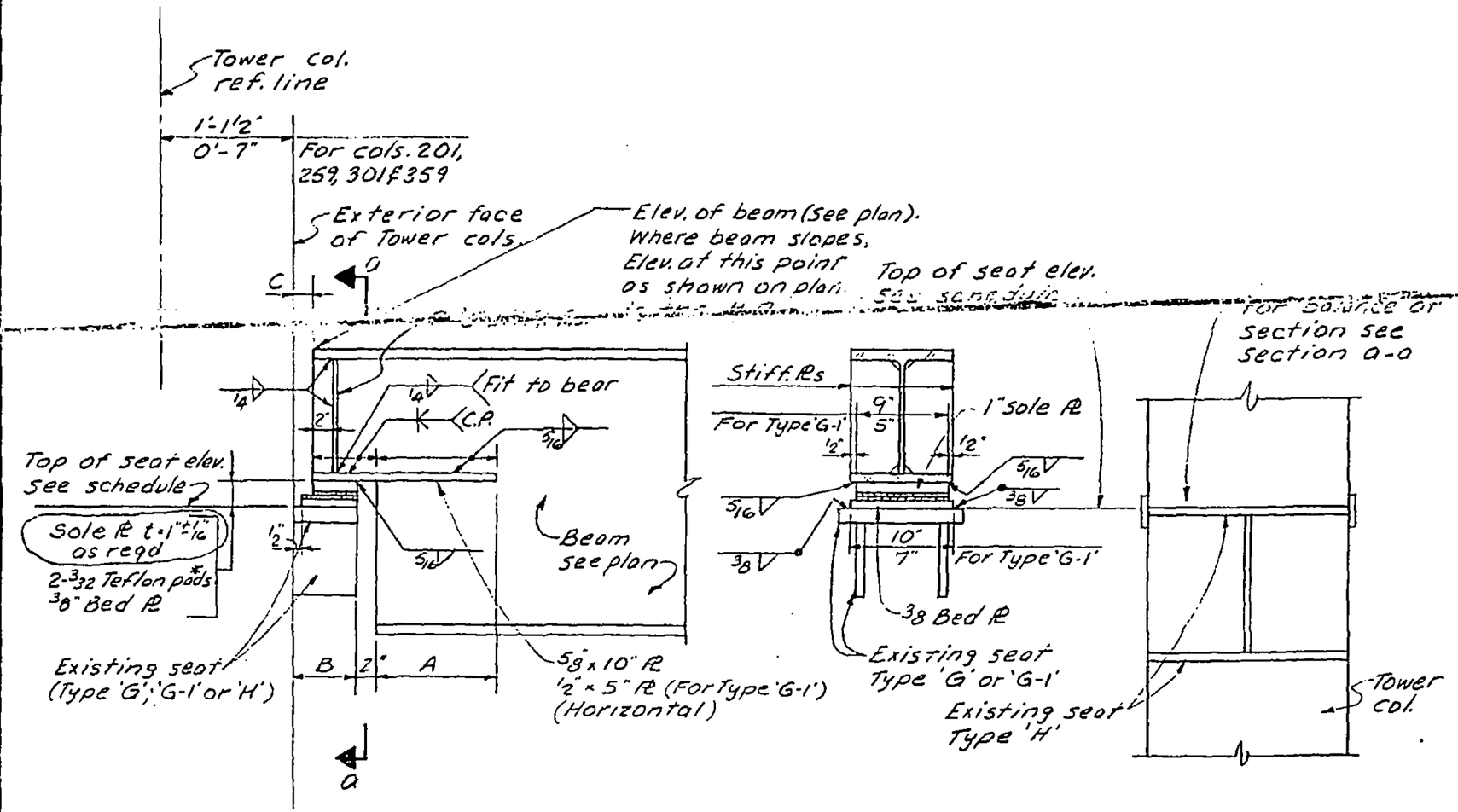

Elevation — Section a-a — Section a1-a1

*Teflon pads to have a bearing capacity of 2000psi.

LICENSED PROFESSIONAL ENGINEER — LESLIE E. ROBERTSON — No. 34360 — UNIVERSITY OF THE STATE OF NEW YORK

DESIGNED
DRAWN S.C.
REVIEWED R.T. & E.L.

12-1K4-G

SKILLING, HELLE, CHRISTIANSEN, ROBERTSON — Structural & Civil Engineers

PROJECT THE WORLD TRADE CENTER | TITLE BEAM CONNECTION DETAIL TO TOWER (EL.332') | DATE 12-8-69

REVISIONS

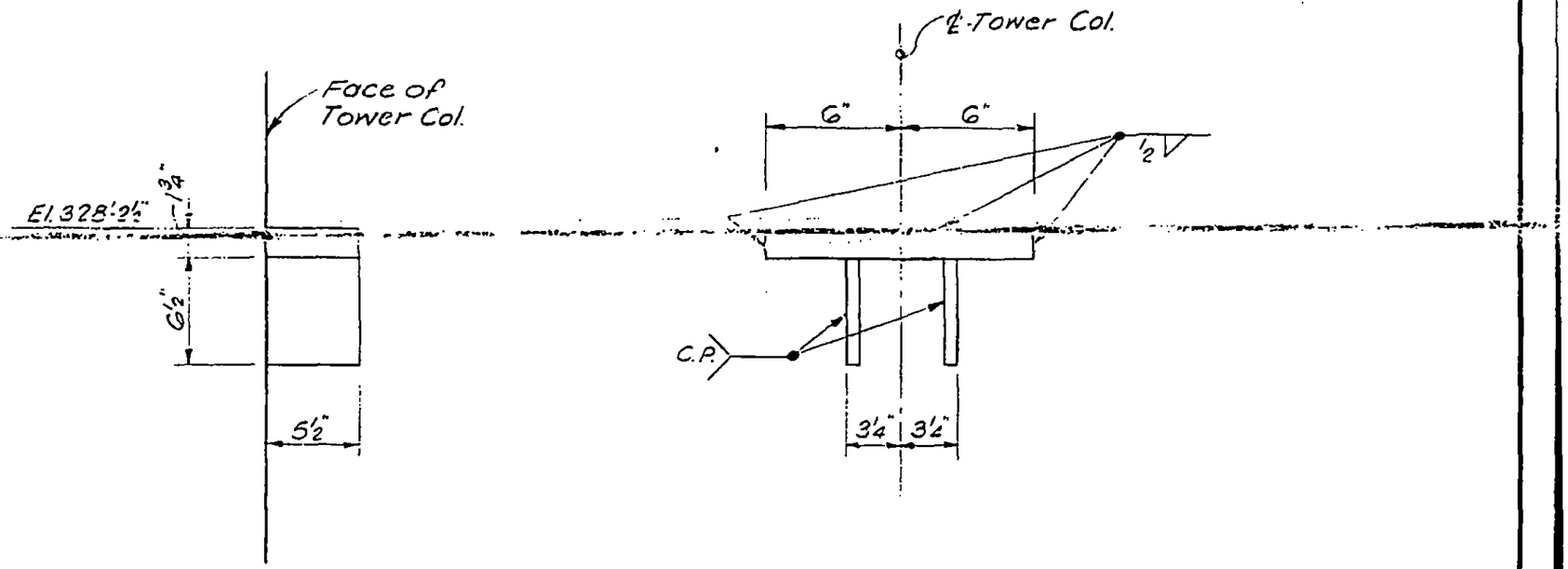

LICENSED PROFESSIONAL ENGINEER
LESLIE E. ROBERTSON
No 34360
UNIVERSITY OF THE STATE OF NEW YORK

DESIGNED

DRAWN S.C.

REVIEWED E.L.

12-JK4-7

SKILLING, HELLE, CHRISTIANSEN, ROBERTSON — Structural & Civil Engineers

PROJECT: THE WORLD TRADE CENTER | TITLE: BEAM CONNECTION DETAIL TO TOWER-EL.332' | DATE: 4-7-72

REVISIONS

7/19/72

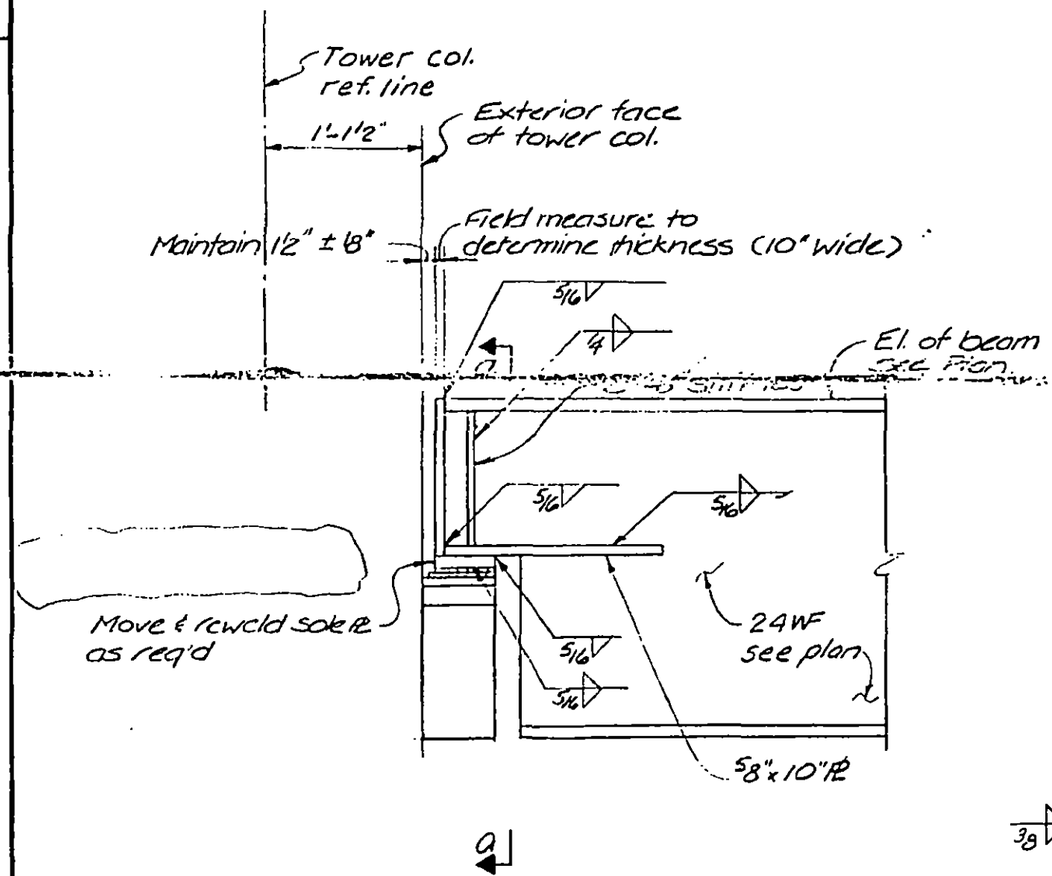

Elevation

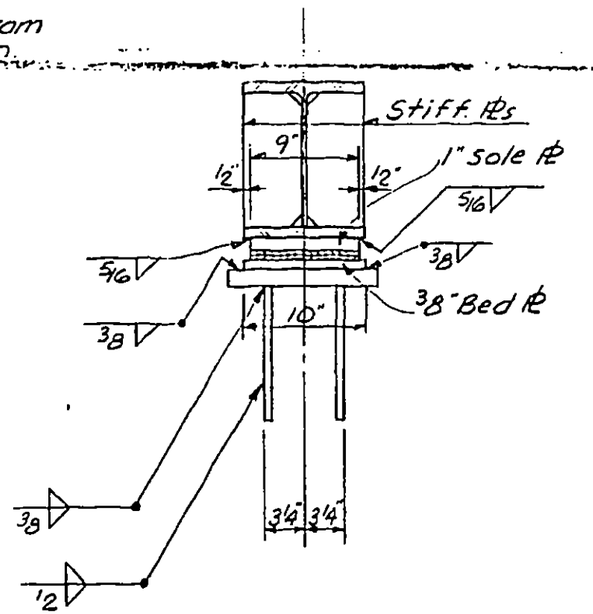

Section a-a

* Teflon pads to have a bearing capacity of 2000 psi.

LICENSED PROFESSIONAL ENGINEER — LESLIE E. ROBERTSON — No 34360 — UNIVERSITY OF THE STATE OF NEW YORK

DESIGNED

DRAWN A. Franqui

REVIEWED

12-JK4-8

SKILLING, HELLE, CHRISTIANSEN, ROBERTSON — Structural & Civil Engineers

PROJECT: THE WORLD TRADE CENTER | TITLE: BEAM TO COLUMN CONNECTION | DATE: 1-13-69

REVISIONS

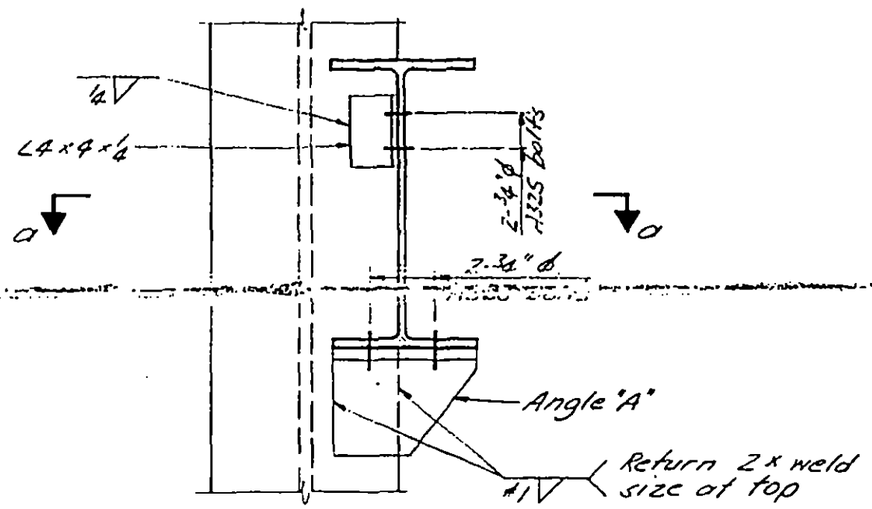

Elevation

Det. No.	Angle "A" (Fy36)	Weld #1 E70XX
1	9x4x1	5/8

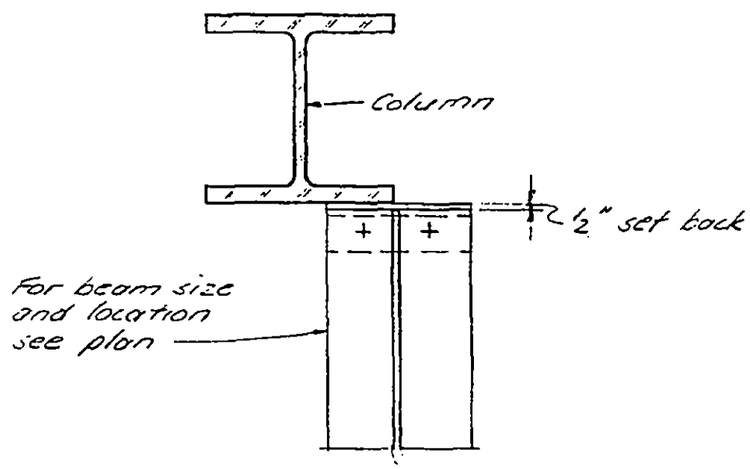

Section

REGISTERED PROFESSIONAL ENGINEER
LESLIE E. ROBERTSON
No. 34360
REGISTERED TO PRACTICE IN THE STATE OF NEW YORK

DESIGNED

DRAWN
J Adams

REVIEWED
R.T. & E.L.

12-JK4-9

SKILLING, HELLE, CHRISTIANSEN, ROBERTSON — Structural & Civil Engineers

PROJECT THE WORLD TRADE CENTER | TITLE BEAM TO COLUMN WEB CONNECTION | DATE 1-13-69

REVISIONS

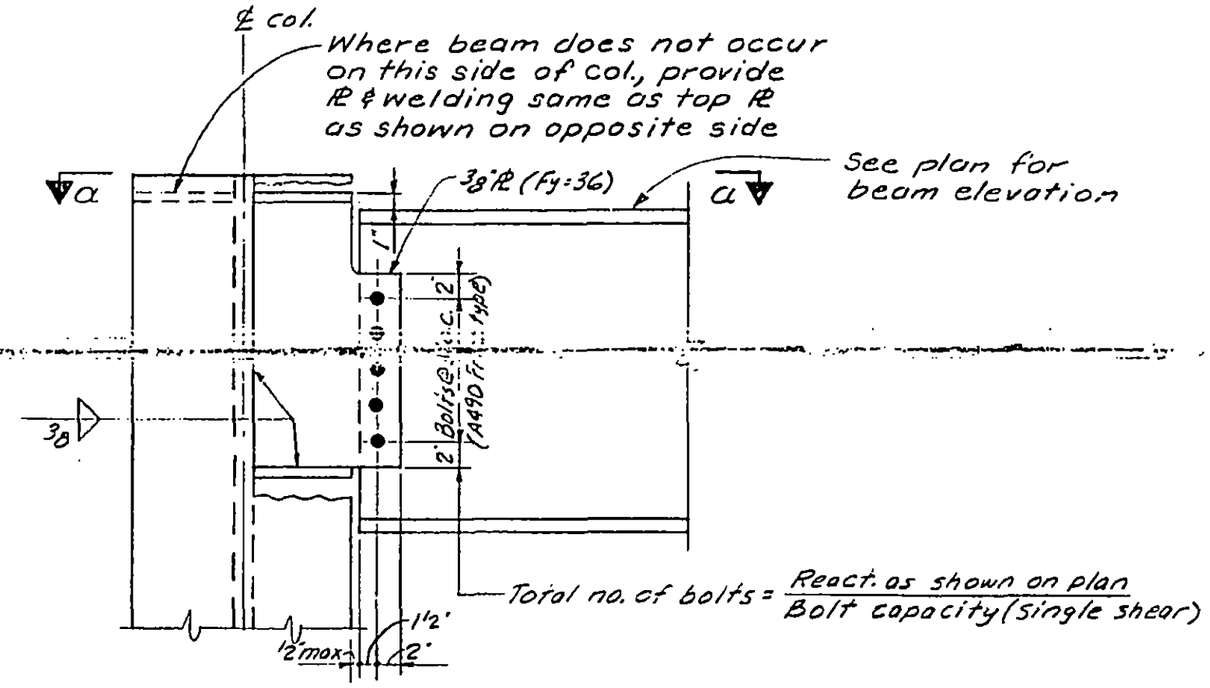

ELEVATION

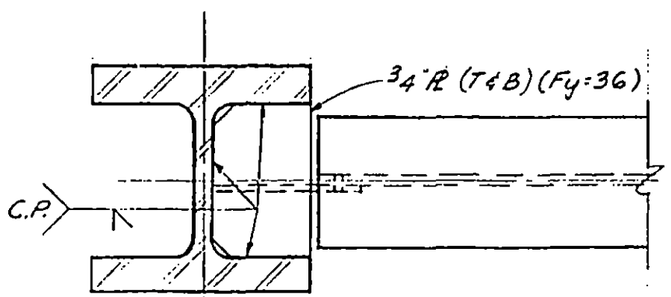

Section a-a

LICENSED PROFESSIONAL ENGINEER — LESLIE E. ROBERTSON — No. 34360 — UNIVERSITY OF THE STATE OF NEW YORK

DRAWN S.C.

REVIEWED R.T. & E.L.

12-JK4-10

SKILLING, HELLE, CHRISTIANSEN, ROBERTSON — Structural & Civil Engineers

PROJECT THE WORLD TRADE CENTER | TITLE DETAIL OF TEMPORARY STRUT (EL.332') | DATE 4-8-70

REVISIONS

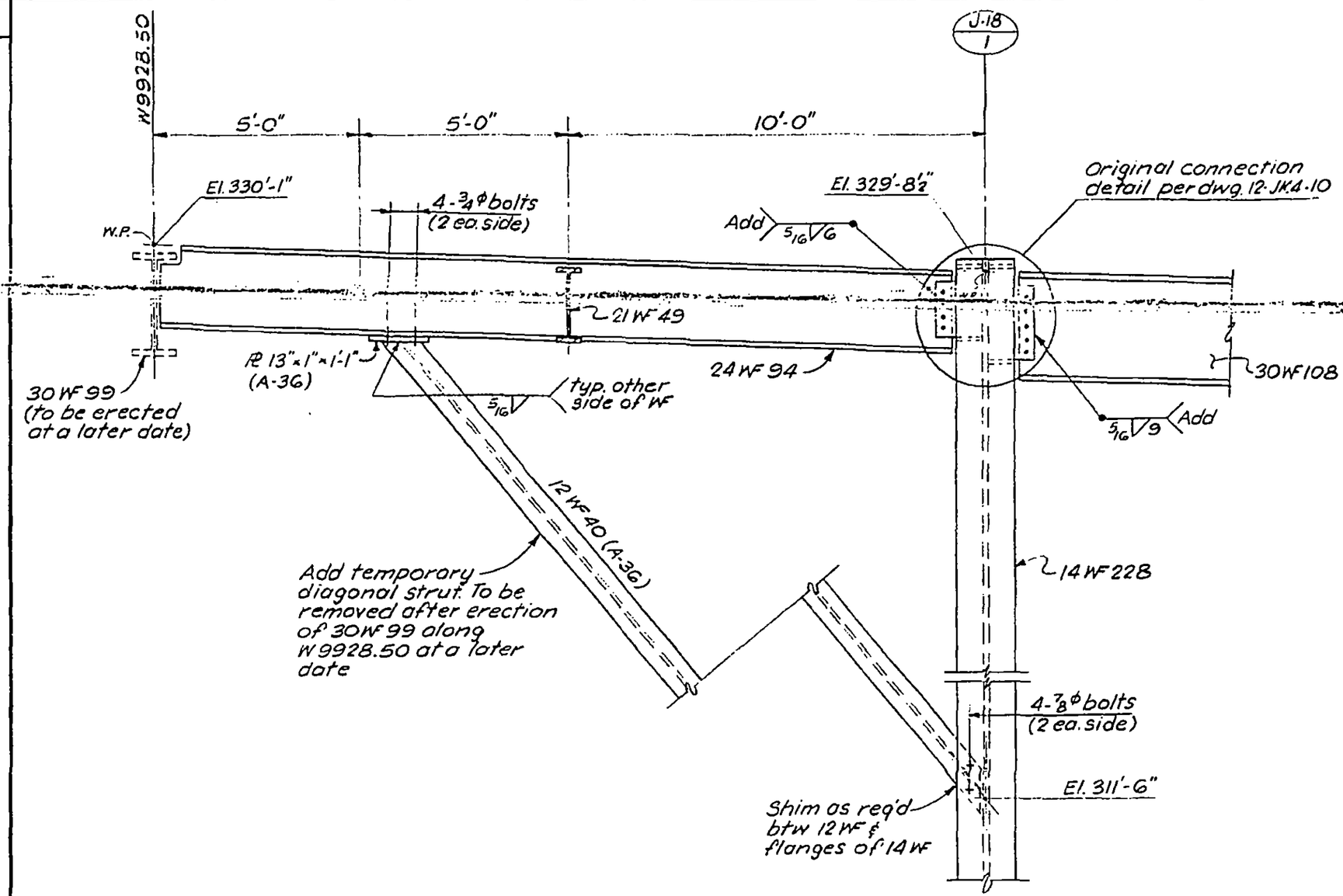

Notes:

1. All welds to be E70xx
2. All bolts to be A-325 HS. friction type.

LICENSED PROFESSIONAL ENGINEER
LESLIE E. ROBERTSON
No 34360
UNIVERSITY OF THE STATE OF NEW YORK

DRAWN S.C.

REVIEWED E.L.

12-JK4·14

SKILLING, HELLE, CHRISTIANSEN, ROBERTSON — Structural & Civil Engineers

PROJECT: THE WORLD TRADE CENTER

TITLE: CONNECTION DETAIL FOR COL. J-14/7 (EL. 332'-0")

DATE: 1-13-69

REVISIONS

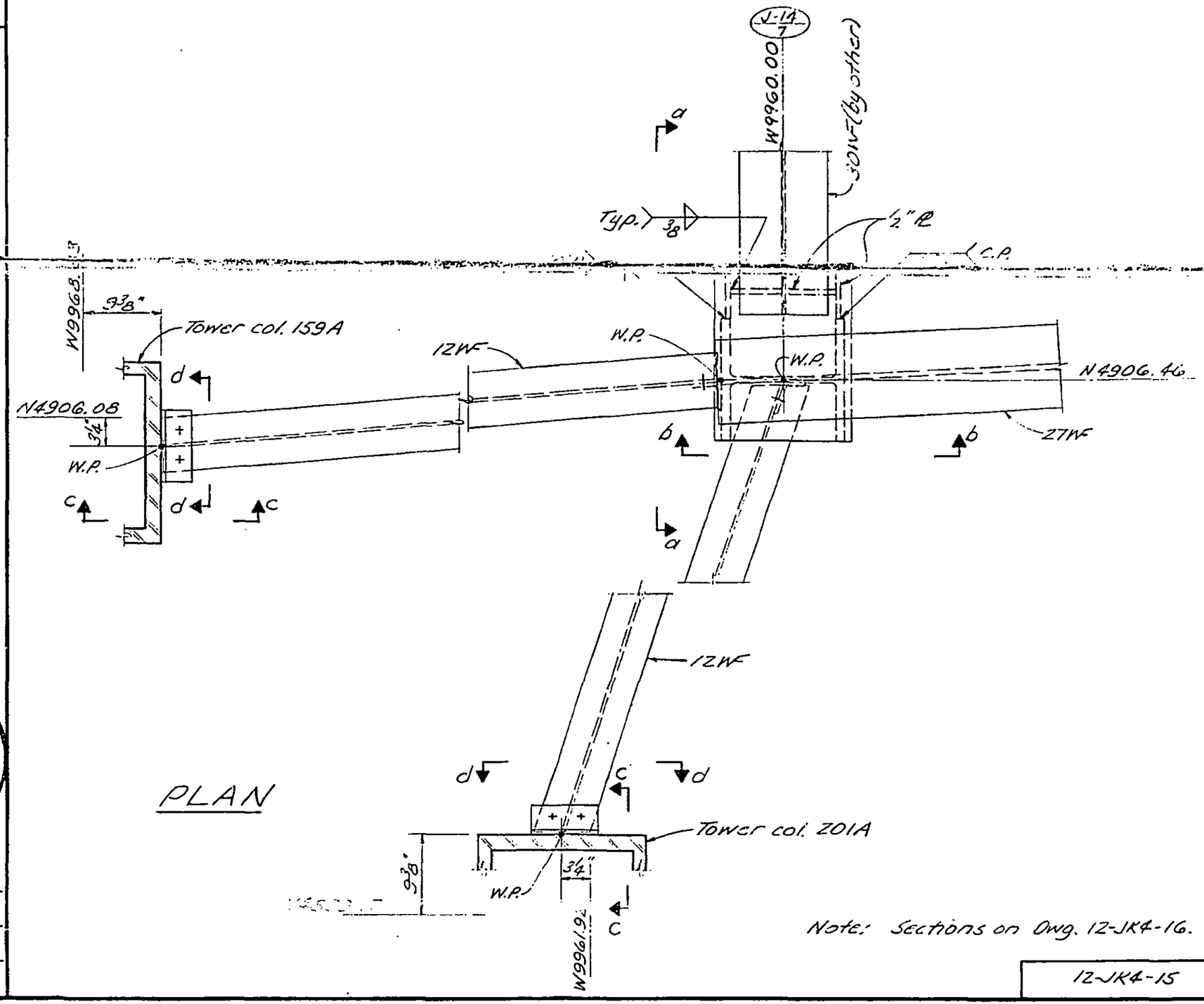

PLAN

Note: Sections on Dwg. 12-JK4-16.

12-JK4-15

LICENSED PROFESSIONAL ENGINEER — LESLIE E. ROBERTSON — No. 34360 — STATE OF NEW YORK

DESIGNED

DRAWN: J. Adams

REVIEWED: R.T. & E.L.

SKILLING, HELLE, CHRISTIANSEN, ROBERTSON — Structural & Civil Engineers

PROJECT: THE WORLD TRADE CENTER | TITLE: CONNECTION DETAIL FOR COLUMN $\frac{1-14}{7}$ (EL 332'-0") | DATE: 1-13-69

REVISIONS

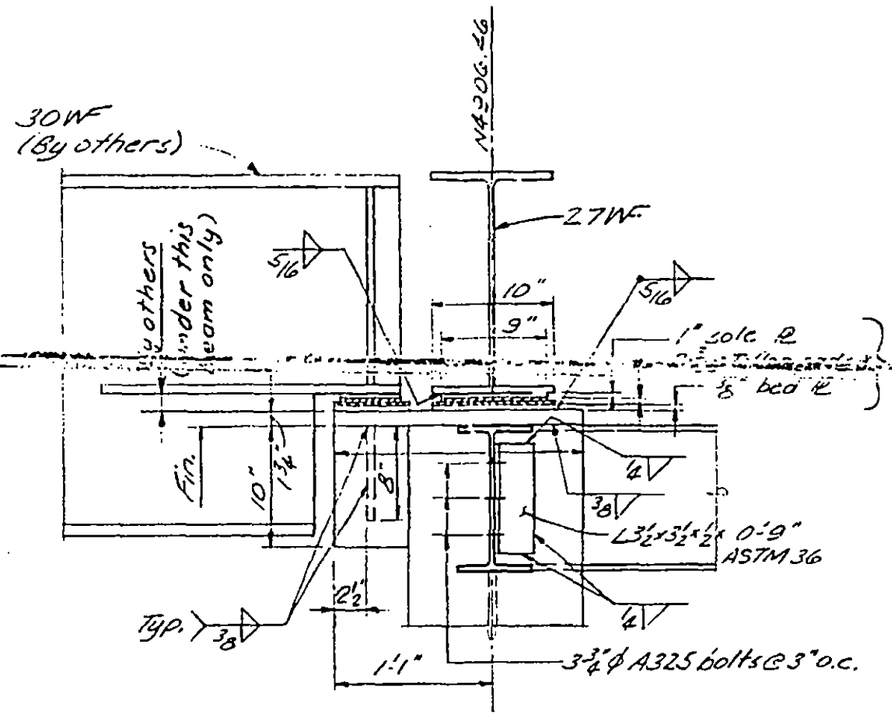

Section a-a

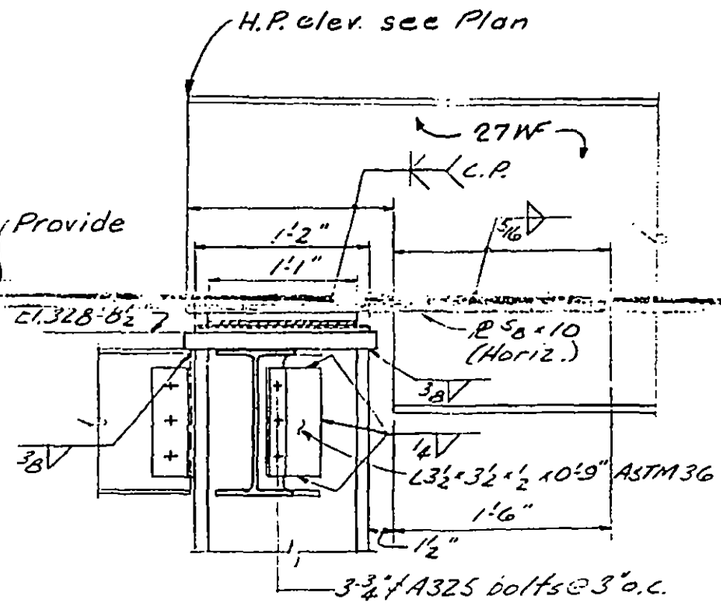

Section b-b

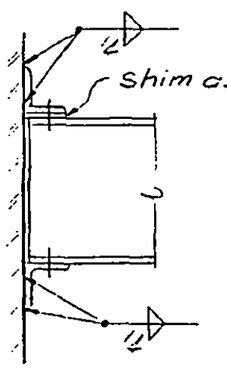

Section c-c

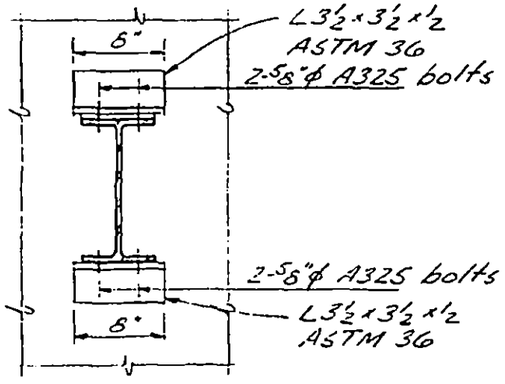

Section a-a

capacity of 2000 psi.

12-JK4-16

LICENSED PROFESSIONAL ENGINEER
LESLIE E. ROBERTSON
No. 36360
OF THE STATE OF NEW YORK

DRAWN
J. Adams

REVIEWED
P T & F I

SKILLING, HELLE, CHRISTIANSEN, ROBERTSON — Structural & Civil Engineers

PROJECT: THE WORLD TRADE CENTER | TITLE: BEAM CONNECTION DETAILS - El. 332' | DATE: 10-23-69

REVISIONS

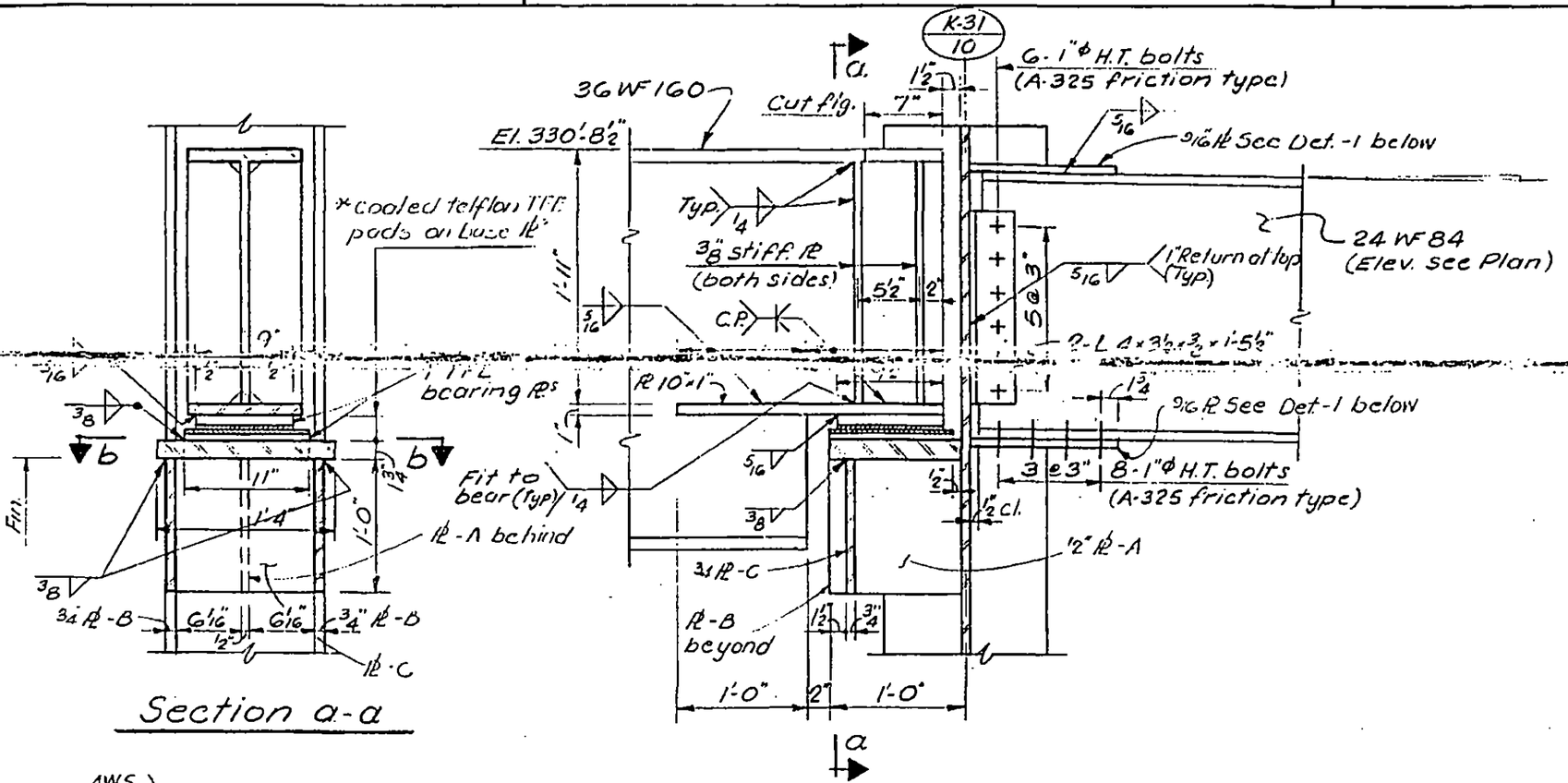

Section a-a

Elevation

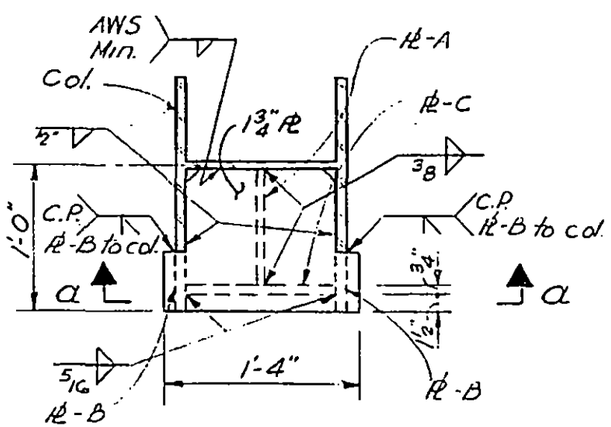

Section b-b

*Lubritef pads to have a bearing capcity of 3000psi

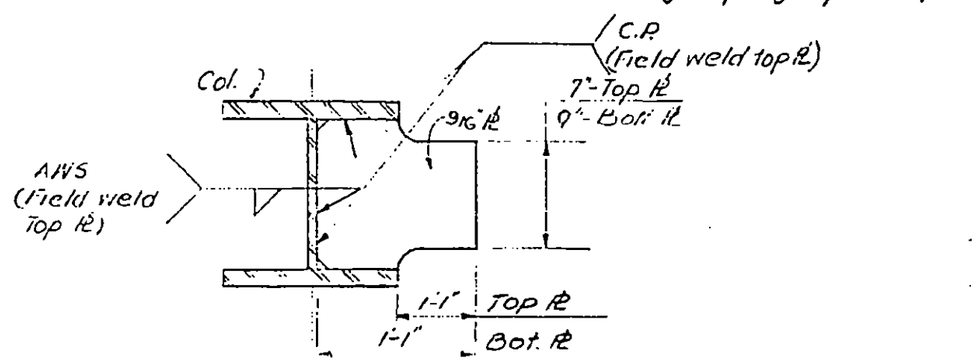

Detail -1

LICENSED PROFESSIONAL ENGINEER
LESLIE E. ROBERTSON
No. 34360
UNIVERSITY OF THE STATE OF NEW YORK

DESIGNED

DRAWN S.C.

REVIEWED E.L.

12-JK4-17

SKILLING, HELLE, CHRISTIANSEN, ROBERTSON — Structural & Civil Engineers

PROJECT: THE WORLD TRADE CENTER | TITLE: CONNECTION DETAIL - EL 332' | DATE: 10-23-69

REVISIONS

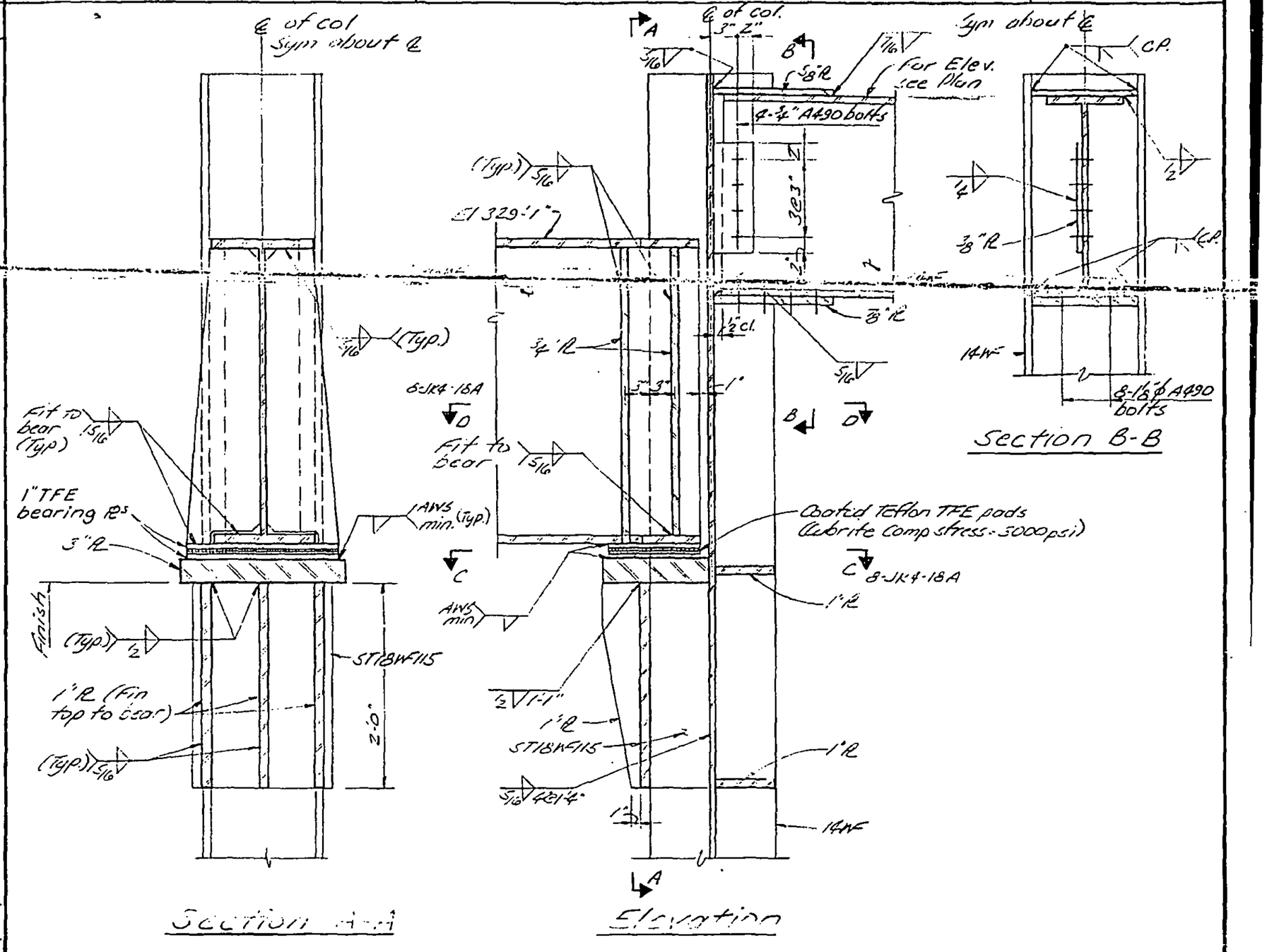

LICENSED PROFESSIONAL ENGINEER — LESLIE E. ROBERTSON — No 34360 — UNIVERSITY OF THE STATE OF NEW YORK

DESIGNED

DRAWN S.C.

REVIEWED E.L.

12-JK4-18

SKILLING, HELLE, CHRISTIANSEN, ROBERTSON — Structural & Civil Engineers

PROJECT: THE WORLD TRADE CENTER | TITLE: CONNECTION DETAIL - EL 352' | DATE: 10-23-69

REVISIONS

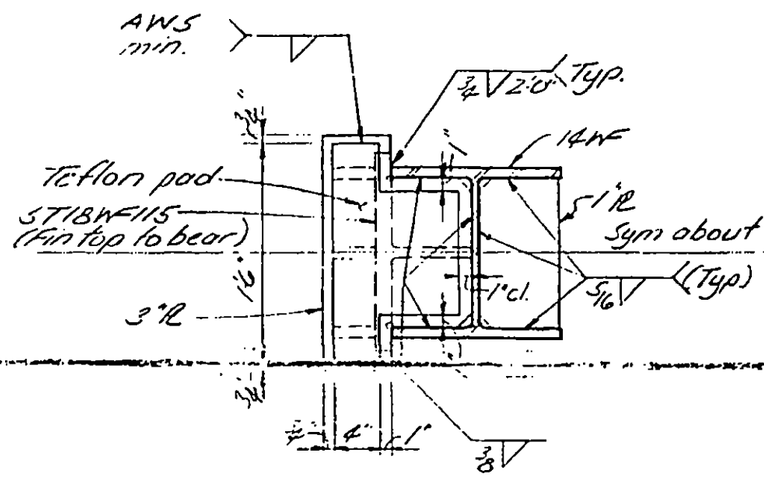

Section C-C

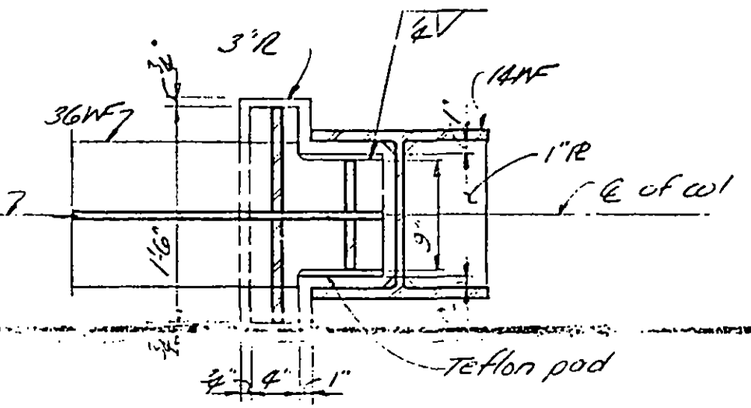

Section D-D

LICENSED PROFESSIONAL ENGINEER
LESLIE E. ROBERTSON
No 34360
UNIVERSITY OF THE STATE OF NEW YORK

DESIGNED

DRAWN
J.A.

REVIEWED
E.L.

12-JK4-18A

SKILLING, HELLE, CHRISTIANSEN, ROBERTSON — Structural & Civil Engineers

PROJECT: THE WORLD TRADE CENTER | TITLE: CONNECTION DETAIL - EL. 332' | DATE: 10-23-69

REVISIONS

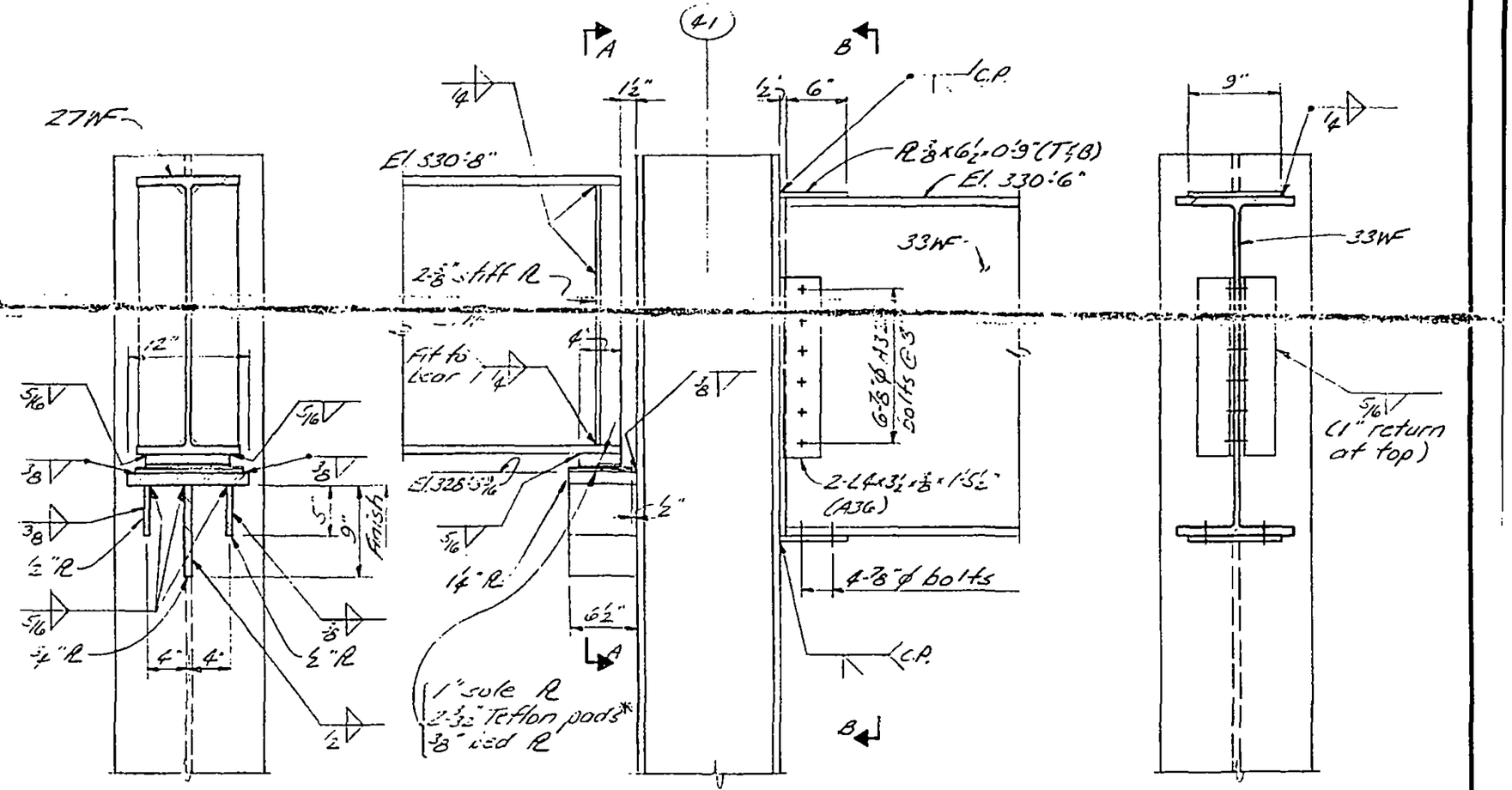

Section A-A

Elevation
(Beams framed to web not shown)

Section B-B

* The bearing capacity of Teflon pads to have 2000 psi.

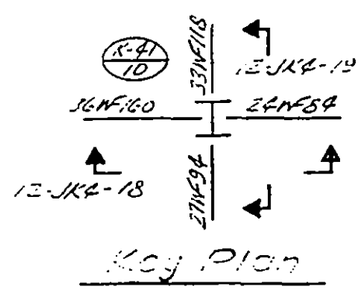

Key Plan

LICENSED PROFESSIONAL ENGINEER — LESLIE E. ROBERTSON — NO 34360 — UNIVERSITY OF THE STATE OF NEW YORK

DESIGNED

DRAWN J.A.

REVIEWED E.L.

12-JK4-19

SKILLING, HELLE, CHRISTIANSEN, ROBERTSON — Structural & Civil Engineers

PROJECT: THE WORLD TRADE CENTER | TITLE: BEAM CONNECTION DETAILS - El. 332' | DATE: 10-23-69

REVISIONS

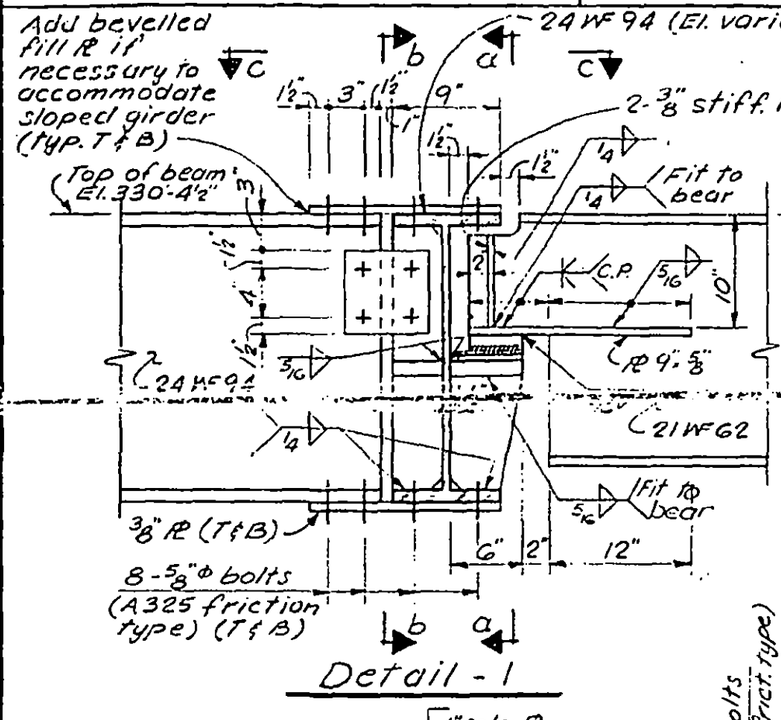

Detail - 1

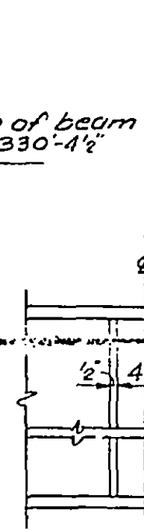

Section d-d

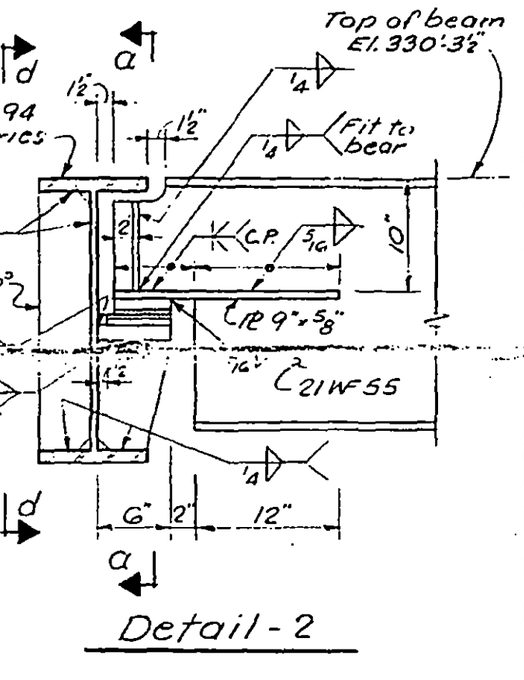

Detail - 2

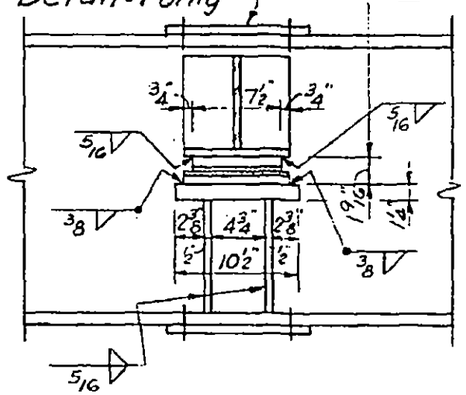

Section a-a

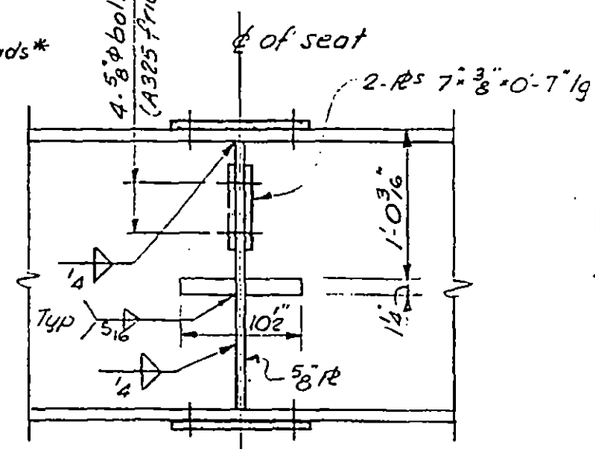

Section b-b

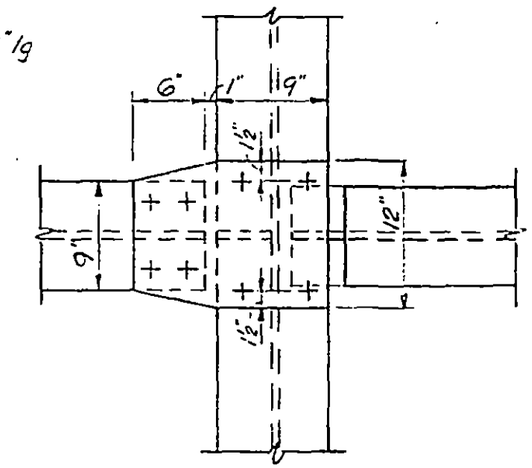

Section c-c

*Teflon pads to have a bearing capacity of 2000 psi

LICENSED PROFESSIONAL ENGINEER LESLIE E. ROBERTSON No. 34360 UNIVERSITY OF THE STATE OF NEW YORK

DESIGNED

DRAWN S.C.

REVIEWED E.L.

12-JK4-20

SKILLING, HELLE, CHRISTIANSEN, ROBERTSON — Structural & Civil Engineers

PROJECT THE WORLD TRADE CENTER | TITLE BEAM CONNECTION DETAIL - El. 332' | DATE 10-23-69

REVISIONS

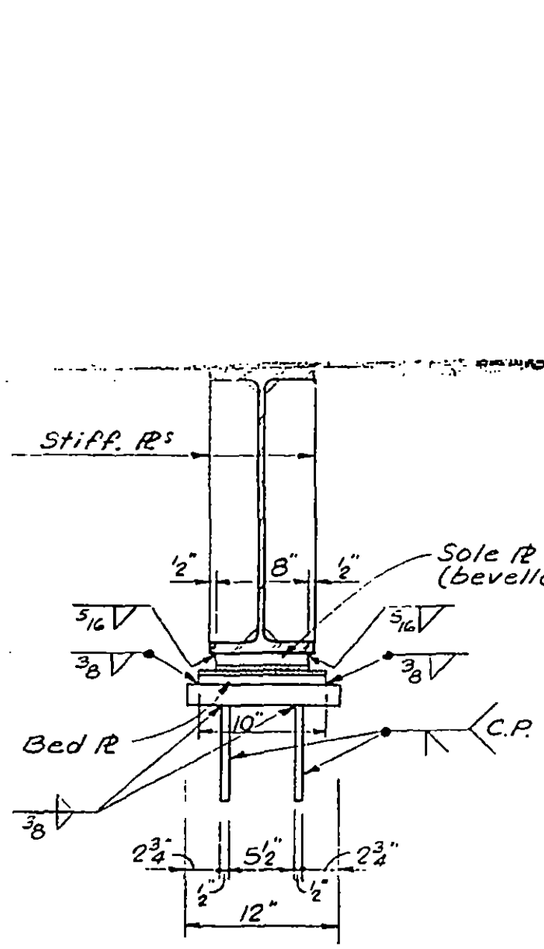

Section a-a

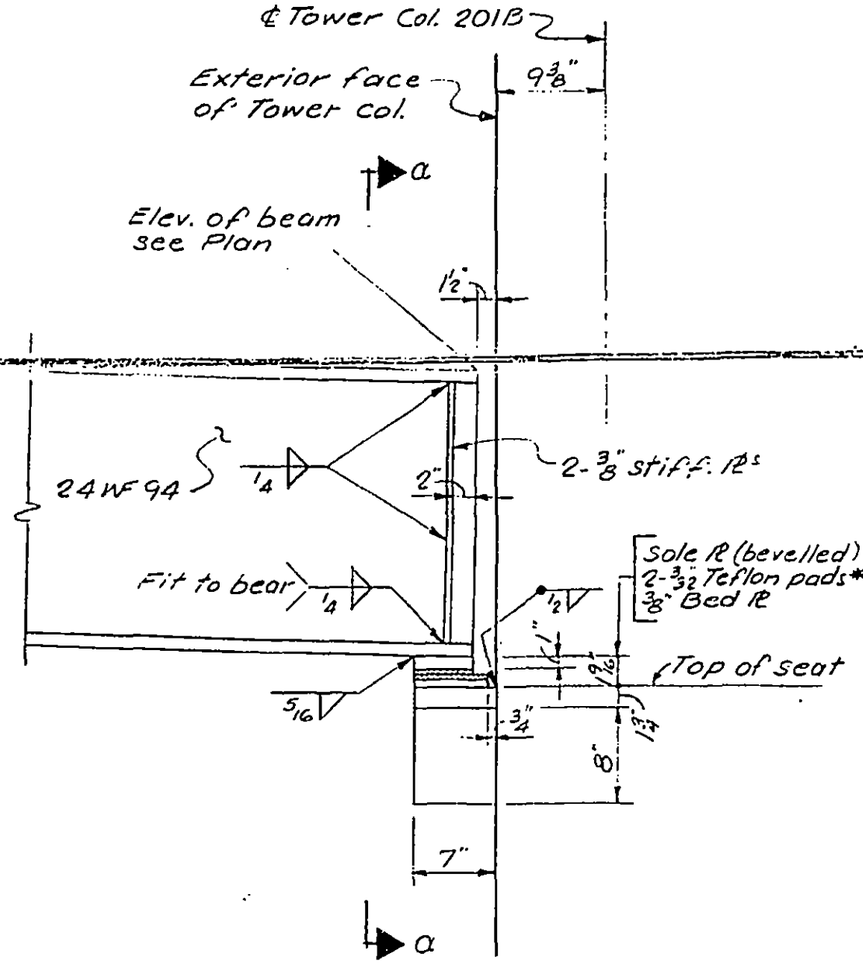

Elevation

* Teflon pads to have a bearing capacity of 2000 psi

LICENSED PROFESSIONAL ENGINEER — LESLIE E. ROBERTSON — NO 34360 — UNIVERSITY OF THE STATE OF NEW YORK

DESIGNED

DRAWN S.C.

REVIEWED E.L.

12-JK4-21

SKILLING, HELLE, CHRISTIANSEN, ROBERTSON — Structural & Civil Engineers

PROJECT THE WORLD TRADE CENTER | TITLE CONNECTION DETAIL - El. 332' | DATE 10-23-69

REVISIONS

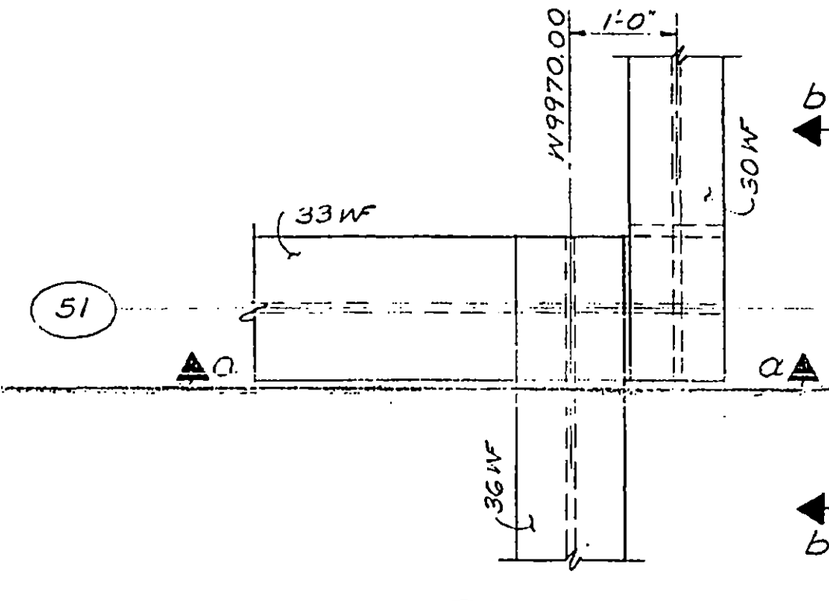

Plan

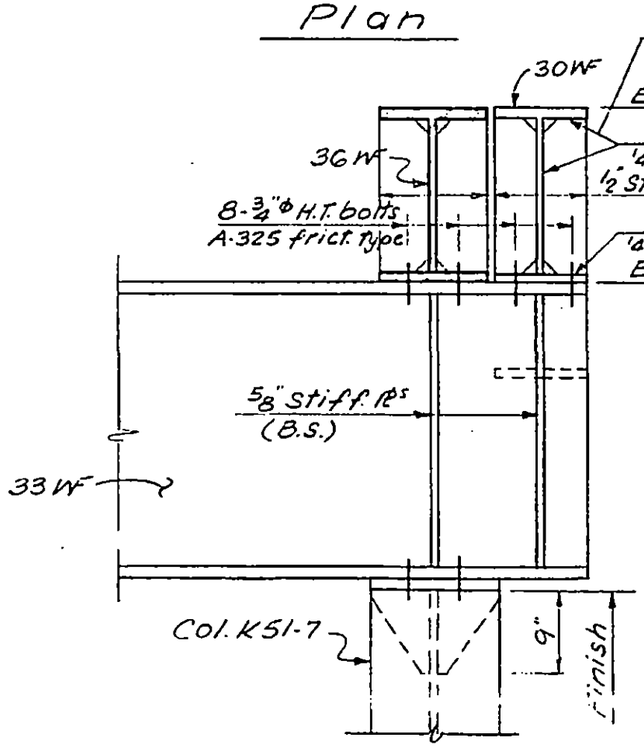

Section a-a

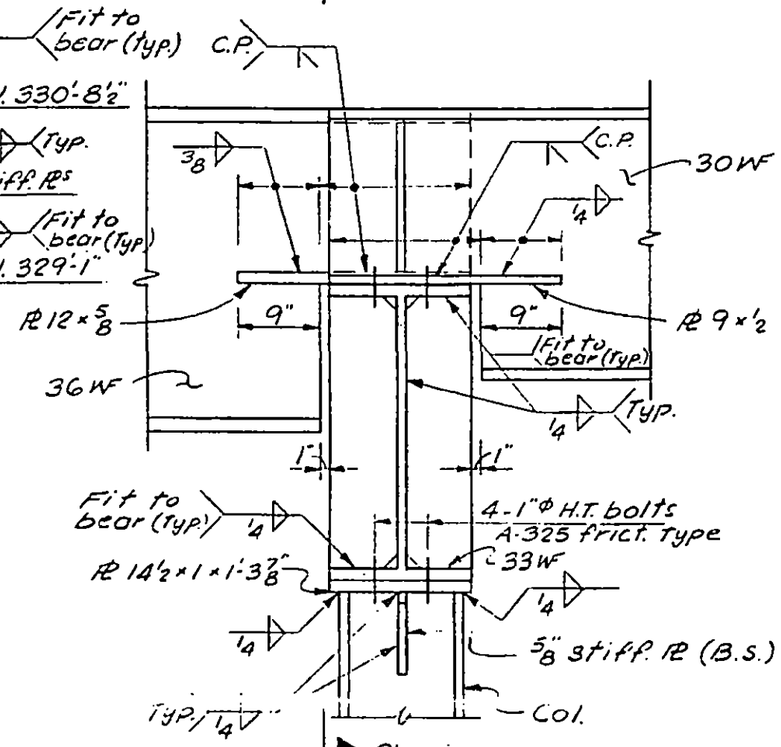

Section b-b

12-JK4-22

LICENSED PROFESSIONAL ENGINEER — LESLIE E. ROBERTSON — NO 34360 — UNIVERSITY OF THE STATE OF NEW YORK

DESIGNED

DRAWN S.C.

REVIEWED E.L.

SKILLING, HELLE, CHRISTIANSEN, ROBERTSON — Structural & Civil Engineers

PROJECT: THE WORLD TRADE CENTER | TITLE: BEAM CONNECTIONS TO SLURRY WALL - NOTES | DATE: 3-19-69

REVISIONS

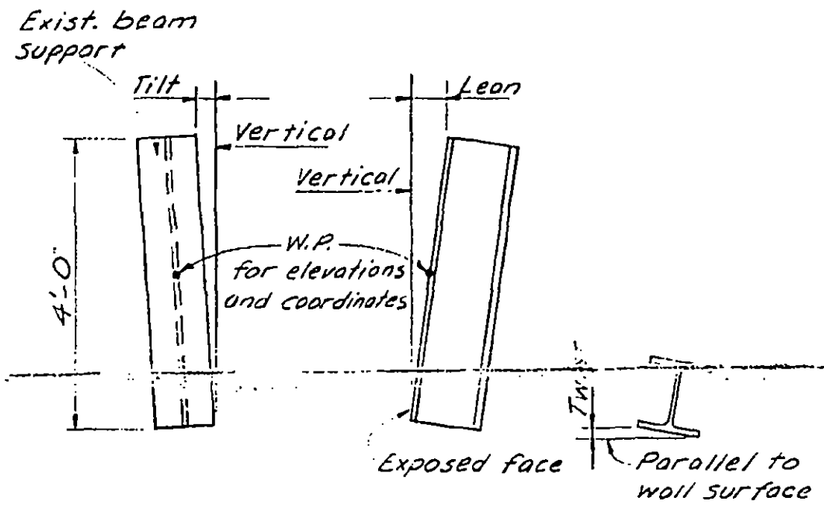

Front view (Looking toward wall) — Side view — Plan

BEAM SUPPORT DEVIATIONS

1. For beam support (12WF53) see PNYA Dwg F-J-6.
2. Deviations shown are positive; negative deviations are in opposite direction.
3. Deviations are scheduled on dwgs. 12-JK5-2 & -3.

NOTES

1. Beam support data scheduled on dwgs. 12-JK5-2 & 12-JK5-3 are taken from survey made by PONYA completed on 2-5-69. Elevations and coordinates are given to center of exposed flange at mid-height.
2. All structural steel to be Fy 36.
3. Welding electrodes to be E70xx.
4. [illegible] unfinished machine bolts. Provide hor. slotted holes in beams and/or detail material to allow a tolerance of beam support location of ± 1/2".
5. Cut away concrete as necessary to insure workmanlike installation of connections and grout space between connection PL & wall with Embeco.
6. "Cinch Anchors" shown on detail 'A' shall be 4 units 4 units Threaded Ring wedge Cinch Anchors (Type 2) with 1 1/2" ϕ bolts as manufactured by National Lead Company
7. Should reinforcing bars be encountered when drilling for cinch anchors, move plate B by not more than 2" to miss bars.
8. Where beam is not at a right angle to plate B, bend outstanding legs of angles A to lie flat against plate B.

LICENSED PROFESSIONAL ENGINEER — LESLIE E. ROBERTSON — No. 34360 — UNIVERSITY OF THE STATE OF NEW YORK

DESIGNED: J.H.

DRAWN: A.L. FRANQUI

REVIEWED: E.L.

12-JK5-1

SKILLING, HELLE, CHRISTIANSEN, ROBERTSON — Structural & Civil Engineers

PROJECT: THE WORLD TRADE CENTER | TITLE: BEAM CONNECTIONS TO SLURRY WALL-SCHEDULE I | DATE: 3-19-69

REVISIONS
3-31-69
4-18-69
5-29-69

FIELD CONNECTION DATA										BEAM SUPPORT DATA						
Conn.	Steel Beam				Detail Material					PNYA	Coordinates		Center	Deviations (in.)		
Det.	Plan	Size	Elev.	Coord.	Angle A	R B	Weld C	Weld D	Dim E	Desig.	North	West	Elev.	Tilt	Lean	Twist
A1	SJ-45	24WF160	262'-9"	N4868±	2 JL 5x3x3/8x1'-4"	18x3/4	5/16	–	4	GX1	4867.85	9796.34				
A2		18WF85	262'-9"	N4862±	2 JL 5x3x3/8x0'-10"	18x3/4		–	4	GX2	4861.05	9794.87				
A3		18WF85	262'-9"	N4857±		18x3/4		–	4	GX3	4857.17	9793.97				
A4		18WF85	262'-9"	N4820±		18x3/4		–	4	GX4	4819.67	9784.84				
A5		18WF85	262'-9"	N4815±	2 JL 5x3x3/8x0'-10"	18x3/4		–	4	GX5	4815.85	9783.76				
A6	SJ-45	24WF160	262'-9"	N4809±	2 JL 5x3x3/8x1'-4"	18x3/4	5/16	–	4	GX6	4809.30	9781.54				
B1	SK-50	30x261	262'-9"	W9895.00	2 JL 5x3x3/8x2'-0"	20x1/2	5/8	3/4	3	L13E	4256.93	9895.64	260.98	0.06	0.12	0.20
										L13W	4257.14	9899.61	260.87	0.16	0.08	0
C1	SK-51	31x261	262'-9"	W9867.50	2 JL 5x5x5/8x2'-0"*	38x3/4	1/2	5/8	1/2	L12E	4256.31	9866.50	261.12	0.06	0	0
										L12W	4256.38	9870.63	261.10	0.10	0.06	0
D1	SJ-75	24WF76	289'-5"	W9974.50	2 JL 5x3x7/16x1'-4"	–	3/8	–	4	V21	5202.60	9974.48	288.06	0	0.06	0
D2		21WF55	289'-5"	W9960.00	2 JL 5x3x7/16x1'-2"	–	3/8	–	3 1/2	V22W	5201.78	9960.05	288.50	0	0	0
D3		21WF55	289'-5"	W9952.75	2 JL 5x3x7/16x1'-2"	–	3/8	–	3 1/2	V22E	5201.27	9952.70	288.52	0	0.08	0
E1		30WF99	289'-5"	W9940.00	L 5x5x7/16x2'-0"	–	3/8	–	3	V23	5200.49	9940.38	288.46	0	0.08	0
E2		30WF99	289'-5"	W9900.00	L 5x5x7/16x2'-0"	–	3/8	–	3	V25	5199.31	9900.47	287.38	-0.12	0.10	0
H		27WF94	288'-1"	W9870.00	2 JL 5x3x7/16x1'-10"	–	–	–	–	V26	5197.95	9870.90	287.17	0.06	0.04	0
F1		16WF40	288'-1"	W9863.33	See 12-JK5-9											
F2		21WF55	289'-7 1/2"	W9855.67	See 12-JK5-9											
D5		16B31	289'-5"	N5194.00	2 JL 5x3x7/16x1'-0"	–	3/8	–	2	G1N	5194.01	9840.62	287.88	-0.22	0.08	0
D6		16B31	289'-5"	N5186.00	2 JL 5x3x7/16x1'-0"	–	3/8	–	2	G1S	5185.34	9840.52	287.84	0.44	-0.06	0
D7		14B22	289'-5"	N5177.50	2 JL 5x3x7/16x0'-9"	–	3/8	–	2 1/2	G2	5177.48	9840.32	287.86	-0.12	0.06	0
C2		33WF152	288'-6"	N5147.50	2 JL 5x3x7/16x2'-2"	28x3/4	3/8	5/8	1/2	G3N(Top)	5150.83	9840.74	287.78	-0.08	0.06	0
										G3S(Top)	5146.88	9840.77	287.86	0	0	0
C3		33WF152	288'-6"	N5117.50	2 JL 5x3x7/16x2'-2"	28x3/4	3/8	5/8	1/2	G4S(Top)	5121.50	9840.77	288.12	0.16	0.04	0
										G5	5116.80	9840.78	288.08	-0.12	0	0
C4		33WF152	288'-6"	N5087.50	2 JL 5x3x7/16x2'-2"	26x7/8	3/8	3/8	1/2	G6N	5089.63	9840.47	287.49	0.04	0	0
										G6S	5085.63	9840.40	288.10	0	0.04	0.20
C5	SJ-75	33WF240	288'-6"	N5057.50	2 JL 5x5x5/8x2'-0"*	28x1 3/8	1/2	5/8	1/2	G7	5060.72	9840.54	287.96	0.14	-0.10	0
										G8	5054.94	9839.37	288.05	-0.30	0	0

1. * — Slot Ls per 12-JK5-6
2. See notes on 12-JK5-1
3. See details on 12-JK5-4 thru 11.

LICENSED PROFESSIONAL ENGINEER — LESLIE E. ROBERTSON — No. 34360 — UNIVERSITY OF THE STATE OF NEW YORK

DESIGNED J.H.
DRAWN A.L. FRANQUI
REVIEWED E.L.

12-JK5-2

1042-4,3